Spare parts list
(5.970-298.0) Spare parts list HDS 895 M ECO

DE HINWEISE

Weitere Sprachen:
Diese Ersatzteilliste ist in weiteren Sprachen erhältlich. Sie erhalten diese unter www.kaercher.com im Bereich Service.
Die Schreibweise der Teilenummer, z.B. 75456380, entspricht der Teilenummer 7.545-638.0.
Mengenangaben:
Die Mengenangaben in der Ersatzteilliste entsprechen den in der Baugruppe verbauten Stückzahlen der Bauteile.
Meterware:
Ersatzteile welche als Meterware geliefert werden sind auf Einbaulänge selbst zu kürzen. Die Stückzahlen sind als Mindestbestellmenge =1m angegeben und müssen je nach Bedarf auf weitere volle Meterzahlen erhöht werden.
Versionen/ Werknummern:
Sind Versionen oder Werknummern in der Ersatzteilliste angegeben, ist anhand dieser vor Bestellung zu prüfen, welches Bauteil für ihr Gerät verwendet werden muss.
Lackierte Teile:
Bei Bestellungen von lackierten Teilen welche in der Ersatzteilliste nicht in verschiedenen Farben ausgewiesen sind, ist zusätzlich die Farbnummer oder Farbe mit anzugeben.
Technische Änderungen:
Technische Änderungen sowie das Recht der ausschließlichen Auswertung unseres geistigen Eigentums behalten wir uns vor.

EN INSTRUCTIONS

Other languages:
This list of spare parts is also available in other languages. You can get this list from www.kaercher.com in the Service division.
The designation of the part number e.g. 75456380 is equal to 7.545-638.0.
Quantity details:
The quantity details in the spare parts list correspond to the number of pieces of the component installed in the assembly group.
Piece goods:
Spare parts that are sold as piece goods are to be cut to the desired length. The quantities have been indicated as minimum order quantity =1m and must be rounded off to the full meter figure depending on your requirements.
Version/ Plant numbers:
If version or plant numbers are mentioned in the spare parts list, then use the same to check before ordering which spare part needs to be used for your appliance.
Painted parts:
While ordering painted parts that are not mentioned in the spare parts list in their colour variations, please mention the colour number or the colour you require.
Technical changes:
We reserve the right to make technical changes as well as the right to exclusive use of our intellectual property.

FR REMARQUES

Autres langues:
Cette liste de pièces de rechange est disponible en autres langues. Cela est disponible sous www.kaercher.com dans le menu Service.
La désignation du numéro de pièce, par ex. 75456380, correspond au numéro de pièce 7.545-638.0.
Indications de quantité:
Les indications de quantité dans la liste de pièces de rechange corresponde aux nombres de pièces des composant utilisées dans la construction.
Matériel au mètre:
Les pièces de rechange qui sont livrées au mètre doivent être raccourcies à longueur souhaitée par l'acheteur même. Les nombres des pièces sont indiquées en quantité de commande minimale = 1m et doivent être augmentés selon le besoin à une chiffre de mètre complète.
Versions/ Numéros d'usine:
Lorsqu'il sont indiquées des versions ou des numéros d'usine dans la liste de pièces de rechange, vous devez vérifier que composant doit être utilisé pour votre appareil.
Pièces laquées:
Pour commander des pièces laquées,o ù les différentes couleurs ne sont pas indiquées dans la liste des pièces de rechange, vous devez indiquer en plus le numéro de la couleur ou seulement la couleur.
Modifications techniques:
Nous nous réservons la possibilité des modifications techniques ainsi le droit d'exploitation exclusive de notre propriété intellectuelle.

IT AVVERTENZE

Altre lingue:
Il presente elenco di parti di ricambio è disponibile sul nostro sito Web anche in altre lingue: sotto www.kaercher.com alla voce “Service”.
L’indicazione del codice pezzo, ad es. 75456380, corrisponde al codice pezzo 7.545-638.0
Indicazioni di quantità:
Le indicazioni di quantità riportate dall’elenco “parti di ricambio” corrispondono al numero delle singole componenti contenute nella rispettiva unità.
Merce a metro:
Le parti di ricambio fornite come “merce a metro” devono venire in seguito accorciate alla lunghezza necessaria per il montaggio. La quantità unitaria è indicata come “quantità minima di ordinazione = 1m” e deve all’occorrenza venire moltiplicata per il numero intero di metri necessari.
Versioni / Numeri di fabbricazione:
Quando l’elenco “parti di ricambio” riporta diverse versioni o numeri di fabbricazione, confrontare la versione o il numero di fabbricazione del ricambio desiderato con quelle/i presenti nell’elenco e indicarla/o al momento dell’ordinazione.
Parti di ricambio verniciate:
Nel caso di ricambi verniciati, se l’elenco parti di ricambio non ne riporta espressamente i diversi colori, al momento dell’ordinazione è necessario indicare anche il colore o il numero del colore desiderato.
Modifiche tecniche:
Ci riserviamo il diritto di apportare modifiche tecniche così come il diritto di utilizzo esclusivo della nostra proprietà intellettuale.

ES INDICACIONES

Otros idiomas:
La lista de piezas de repuesto se puede adquirir en otros idiomas. La puede adquirir en www.kaercher.com en el área de servicios.
La notación de los números de las piezas, p.ej. 75456380 corresponde al número de pieza 7.545-638.0.
Cantidades:
Las indicaciones de cantidades de la lista de piezas de repuesto corresponden al número de piezas montadas en el componente.
Mercancía por metros:
Las piezas de repuesto que se suministran por metros se pueden cortar al largo deseado. La unidad mínima de pedido es de = 1 m y el número de metros completos se puede aumentar según necesidad.
Versiones/números de fábrica:
Si se indica la versión o número de fábrica en la lista de piezas de repuesto, se debe comprobar en ella la pieza a usar para su aparato antes de realizar el pedido.
Piezas lacadas:
Al realizar pedidos de piezas lacadas que no estén indicadas en los diferentes colores en la lista de piezas de repuesto, se debe indicar también la referencia del color o el color.
Modificaciones técnicas:
Reservados los derechos de realizar modificaciones técnicas y aprovechar nuestra propiedad intelectual.

PL WSKAZÓWKI

Pozostałe języki:
Ta lista części zamiennych jest dostępna w także w innych językach. Mogą ją Państwo pobrać ze strony www.kaercher.com w dziale Serwis.
Sposób zapisywania numeru części, np. 75456380, odpowiada numerowi części 7.545-638.0.
Dane ilości:
Dane ilości podane w liście części zamiennych odpowiadają liczbie sztuk podzespołów tworzących dany moduł.
Towar sprzedawany na metry:
Części zamienne dostarczane jako towar sprzedawany na metry po zamontowaniu należy samodzielnie skrócić do potrzebnej długości. Liczba sztuk podana jest jako minimalna ilość zamówienia =1m i w zależności od potrzeb zwiększa się ją o kolejne pełne metry.
Wersje/ Numer zakładu:
Jeżeli w liście części zamiennych podane są wersje lub numery zakładu, przed zamówieniem na ich podstawie należy sprawdzić, który podzespół stosuje się w Państwa urządzeniu.
Części lakierowane:
W przypadku zamówień części lakierowanych, które w liście części zamiennych nie podano w wielu kolorach, należy dodatkowo zaznaczyć nr koloru lub kolor.
Zmiany techniczne:
Zastrzegamy sobie prawo do zmian technicznych oraz wyłącznego wykorzystywania naszej własności intelektualnej.

RU УКАЗАНИЯ:

Другие языки:
Данный список запасных частей также доступен на других языках. Вы найдете его на сайте www.kaercher.com в разделе Service
Маркировка номера детали, например, 75456380, соответствует номеру детали 7.545-638.0.

Указание количества:
Количественные данные в списке запасных частей соответствуют числу компонентов, входящих в состав узлов.

Товар, продаваемый на метры:
Запасные части, продающиеся на метры, необходимо обрезать до нужной длины. Число изделий указано в виде минимального объема заказа = 1м и их количество можно округлить до требуемого по мере необходимости.

Варианты исполнения/заводские номера:
Если варианты исполнения или заводские номера указаны в списке запасных частей, то перед заказом необходимо проверить, какая деталь подходит для вашего устройства.

Лакированные детали:
При заказе лакированных деталей, варианты расцветки которых не указаны в списке запасных частей, необходимо дополнительно указать номер цвета или необходимый для вас цвет.

Технические изменения:
Мы оставляем за собой право на технические изменения, а также право на исключительное использование нашей интеллектуальной собственности.

Table of contents

Spare parts list HDS 895 M ECO (5.970-298.0) ... 7
10 Housing (0.101-012.0) ... 8
11 Cover (0.101-041.0) ... 9
12 Base frame (0.101-013.0) ... 11
13 Handhold (0.102-717.0) ... 13
20 Pump set (0.106-017.0) ... 15
21 Piston (0.106-018.0) ... 16
100 Spare part set pump (2.883-913.0) ... 18
22 Cylinder head (0.108-582.0) ... 19
100 Spare part set pump (2.883-913.0) ... 23
23 Switch (0.107-547.0) ... 24
30 Motor (0.111-049.0) ... 26
40 Blower (0.116-215.0) ... 30
50 Fuel system (0.121-257.0) ... 32
51 Fuel pump aspiration (0.121-258.0) ... 33
52 Fuel pump (0.121-254.0) ... 35
60 Electric control box (0.126-004.0) ... 37
61 Top part (0.126-013.0) ... 38
62 Bottom part (0.126-014.0) ... 40
21 Spare parts set ignition transformer (2.883-791.0) ... 44
70 Flow heater (0.131-003.0) ... 45
71 Burner cover (0.131-051.0) ... 46
72 Heating coil (0.131-009.0) ... 48
73 Burner bottom (0.131-057.0) ... 50
80 Float chest (0.136-009.0) ... 52
81 Float chest (0.136-003.0) ... 53
82 DGT (0.136-010.0) ... 56
90 Safety system (0.141-280.0) ... 58
91 Safety system (0.141-281.0) ... 59
6 Reed switch replacement (2.880-194.0) ... 61
92 Safety system (0.141-282.0) ... 62
6 Reed switch replacement (2.880-194.0) ... 64
100 Accessories (0.125-203.0) ... 65
101 Hand trigger gun (0.146-007.0) ... 66
12 Spare part set O-Ring seal 5x (2.880-296.0) ... 68
102 Hand trigger gun (0.146-280.0) ... 69
7 Spare part set O-Ring seal 5x (2.880-296.0) ... 71

Table of contents

103 Jet pipe (0.147-319.0) ... 72
4 Spare part set O-Ring seal 5x (2.880-296.0) ... 74
104 Steam nozzle (0.110-194.0) ... 75
105 Hose reel (0.125-092.0) ... 77
106 Hose reel (0.148-805.0) ... 80
110 Control panel (0.151-002.0) ... 82
200 Special tools (0.120-765.0) ... 84
201 Tool pressure gauge (0.120-002.0) ... 85
202 Tool valve pliers (0.120-003.0) ... 87
203 Tool stop cock (0.120-004.0) ... 89
204 Tool measuring instrument current AC/DC, (0.120-008.0) ... 91
205 Tool measuring instrument set HDS (0.120-009.0) ... 93
206 Tool temperature gauge stop cock HDS (0.120-010.0) ... 95
207 Tool valve seat excess-current (0.120-013.0) ... 97
208 Tool pressure gauge fuel HDS (0.120-012.0) ... 99
209 Tool valve seat excess-current (0.120-014.0) ... 101
210 Tool mandril grooved rings -Piston D20mm (0.120-031.0) ... 103
211 Tool sleeve grooved rings -Piston D20mm (0.120-032.0) ... 105
212 Tool internal puller D8-12mm (0.120-062.0) ... 107
213 Tool countersupport internal puller (0.120-060.0) ... 109
214 Tool internal puller D20-30mm (0.120-064.0) ... 111

Pos	Material #	Name	from ser.nr.	up to ser.nr.
10	0.101-012.0	Housing	0000000000	0000000000
20	0.106-017.0	Pump set	0000000000	0000000000
30	0.111-049.0	Motor	0000000000	0000000000
40	0.116-215.0	Blower	0000000000	0000000000
50	0.121-257.0	Fuel system	0000000000	0000000000
60	0.126-004.0	Electric control box	0000000000	0000000000
70	0.131-003.0	Flow heater	0000000000	0000000000
80	0.136-009.0	Float chest	0000000000	0000000000
90	0.141-280.0	Safety system	0000000000	0000000000
100	0.125-203.0	Accessories	0000000000	0000000000
110	0.151-002.0	Control panel	0000000000	0000000000
200	0.120-765.0	Special tools		

10 Housing (0.101-012.0)

Pos	Material #	Name	Qty.	Unit	from ser.nr.	up to ser.nr.
11	0.101-041.0	Cover	1.000	ST	0000000000	0000000000
12	0.101-013.0	Base frame	1.000	ST	0000000000	0000000000
13	0.102-717.0	Handhold	1.000	ST	0000000000	0000000000

11 Cover (0.101-041.0)

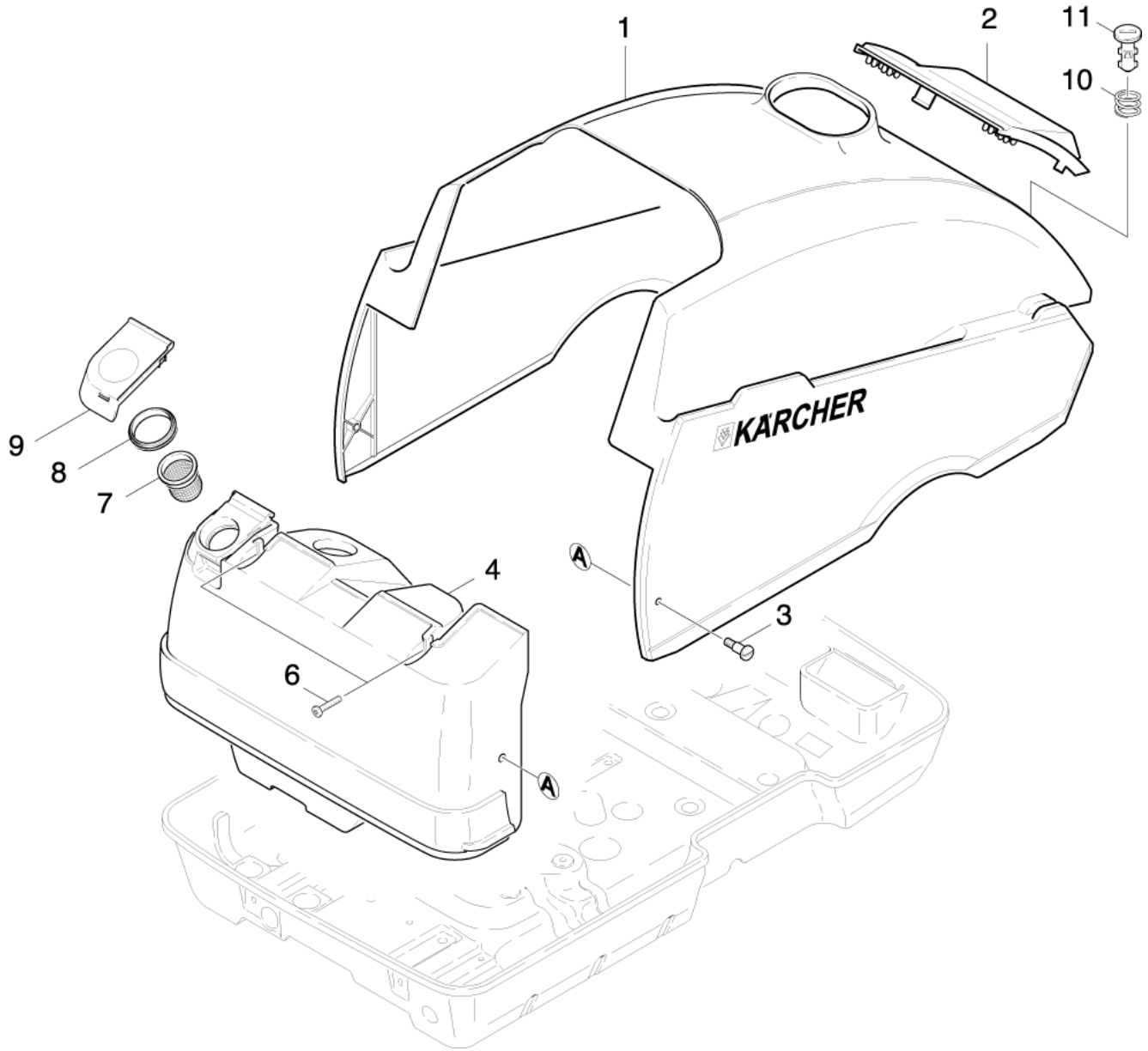

11 Cover (0.101-041.0)

ET/VT (spare/wear parts)	Pos	Material #	Name	Qty.	Unit	from ser.nr.	up to ser.nr.
X-X	1	4.066-385.0	Cover Ersatz alte HDS-M klasse mit VA-B	1.000	ST	0000000000	0000000000
X-X	2	5.030-834.0	Flap	1.000	ST	0000000000	0000000000
X-X	3	5.305-204.0	Shaped screw	2.000	ST	0000000000	0000000000
	4	5.071-048.0	Tank fuel	1.000	ST	0000000000	0000000000
	6	6.303-172.0	Oval head screw M 6X 34	2.000	ST	0000000000	0000000000
X-X	7	5.731-039.0	Filter	1.000	ST	0000000000	0000000000
X-X	8	5.363-290.0	Joint ring	1.000	ST	0000000000	0000000000
	9	5.063-958.0	Cover	1.000	ST	0000000000	0000000000
Position text: / 1.027-514.0 / -515.0							
X-X	9	5.063-957.0	Cover	1.000	ST	0000000000	0000000000
Position text: / 1.027-315.0 /-316.0 /-318.0 /-317.0 / -322.0 / -323.0 / -324.0 / -328.0 / -329.0 / -360.0 /-361.0 /-503.0							
X	10	5.332-236.0	Helical spring	1.000	ST	0000000000	0000000000
X	11	5.316-318.0	Bolt	1.000	ST	0000000000	0000000000

12 Base frame (0.101-013.0)

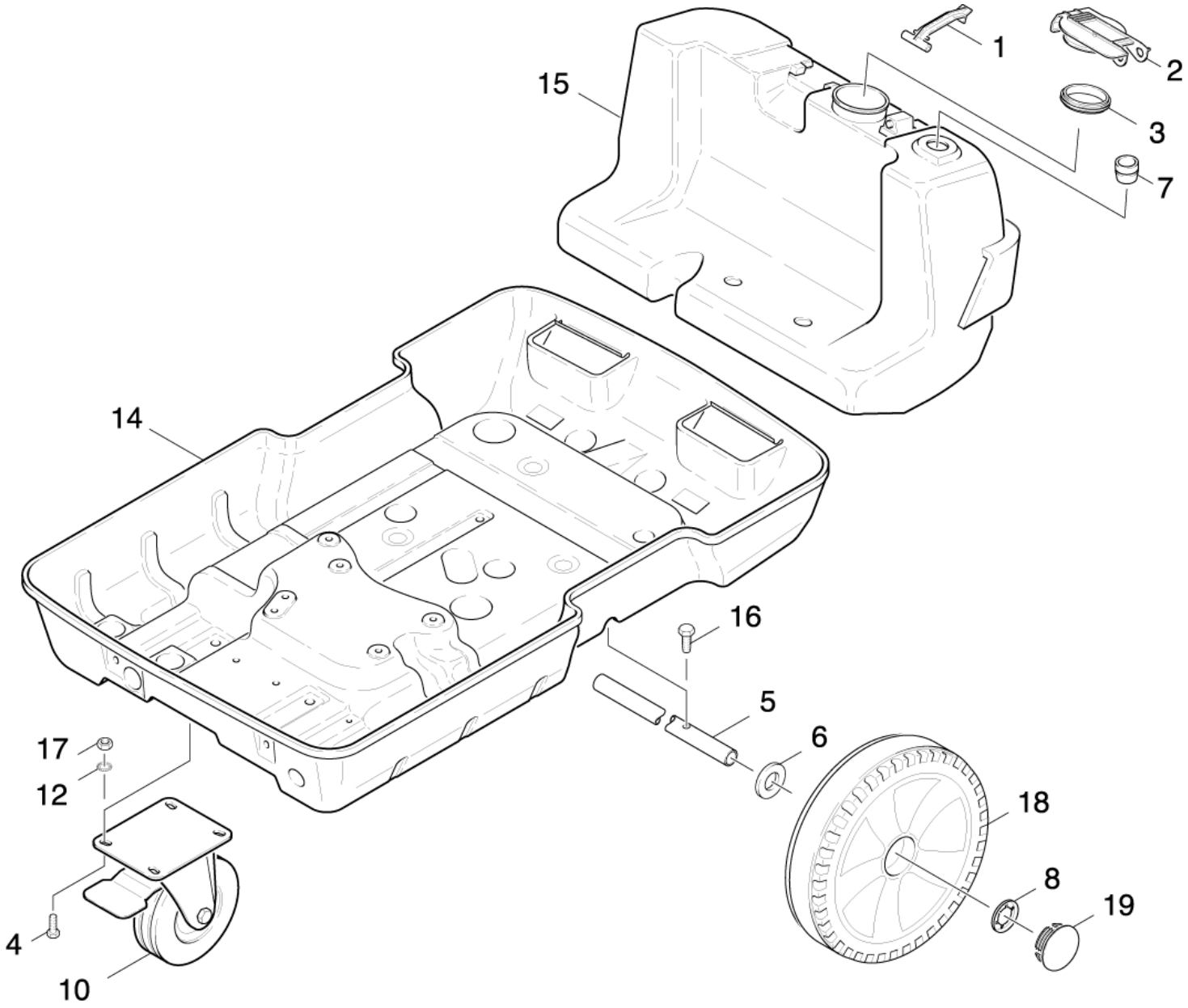

12 Base frame (0.101-013.0)

ET/VT (spare/wear parts)	Pos	Material #	Name	Qty.	Unit	from ser.nr.	up to ser.nr.	Footnote text
X	1	5.042-463.0	Holder	1.000	ST	0000000000	0000000000	
X	2	5.063-448.0	Cover	1.000	ST	0000000000	0000000000	
X-X	3	5.363-300.0	Joint ring	1.000	ST	0000000000	0000000000	
	4	7.304-395.0	Hexagonal head screw M8x16-8.8-A2E ISO	4.000	ST	0000000000	0000000000	
	5	5.105-163.0	Axle	1.000	ST	0000000000	0000000000	
X-X	6	7.312-060.0	Washer 24-100HV-A3E ISO 7091	2.000	ST	0000000000	0000000000	
X	7	5.365-147.0	Profile gasket	1.000	ST	0000000000	0000000000	
X-X	8	6.343-162.0	Lock washer -25	2.000	ST	0000000000	0000000000	
X-X	10	6.435-071.0	Castor 125	1.000	ST	0000000000	0000000000	
X-X	12	7.312-166.0	Toothed lock washer A8,4-FSt-A3E DIN 67	2.000	ST	0000000000	0000000000	
	14	5.050-046.0	Frame	1.000	ST	0000000000	0000000000	
X-X	15	5.071-047.0	Tank chemistry	1.000	ST	0000000000	0000000000	
	16	6.303-031.0	Screw M8x16-ST-A2R DIN 7500-1	2.000	ST	0000000000	0000000000	
X-X	17	7.311-004.0	Hexagon nut M8 -8-A3E ISO 4032	4.000	ST	0000000000	0000000000	
	18	4.515-098.0	Wheel complete neutrally	2.000	ST			
Position text: 1.025-352.0								
X-X	18	4.515-092.0	Wheel complete	2.000	ST	0000000000	0000000000	
Position text: 1.025-311.0 /-312.0 /-315.0 /-316.0 /-317.0 /-318.0 /-319.0 /-320.0 /-324.0 /-325.0 /-351.0								
	19	5.392-035.0	Wheel cap	1.000	ST			YELLOW
Position text: 1.025-311.0 /-312.0 /-315.0 /-316.0 /-317.0 /-318.0 /-319.0 /-320.0 /-324.0 /-325.0 /-351.0								
X-X	19	5.392-038.0	Wheel cap	2.000	ST	0000000000	0000000000	BLACK
Position text: 1.025-352.0								

13 Handhold (0.102-717.0)

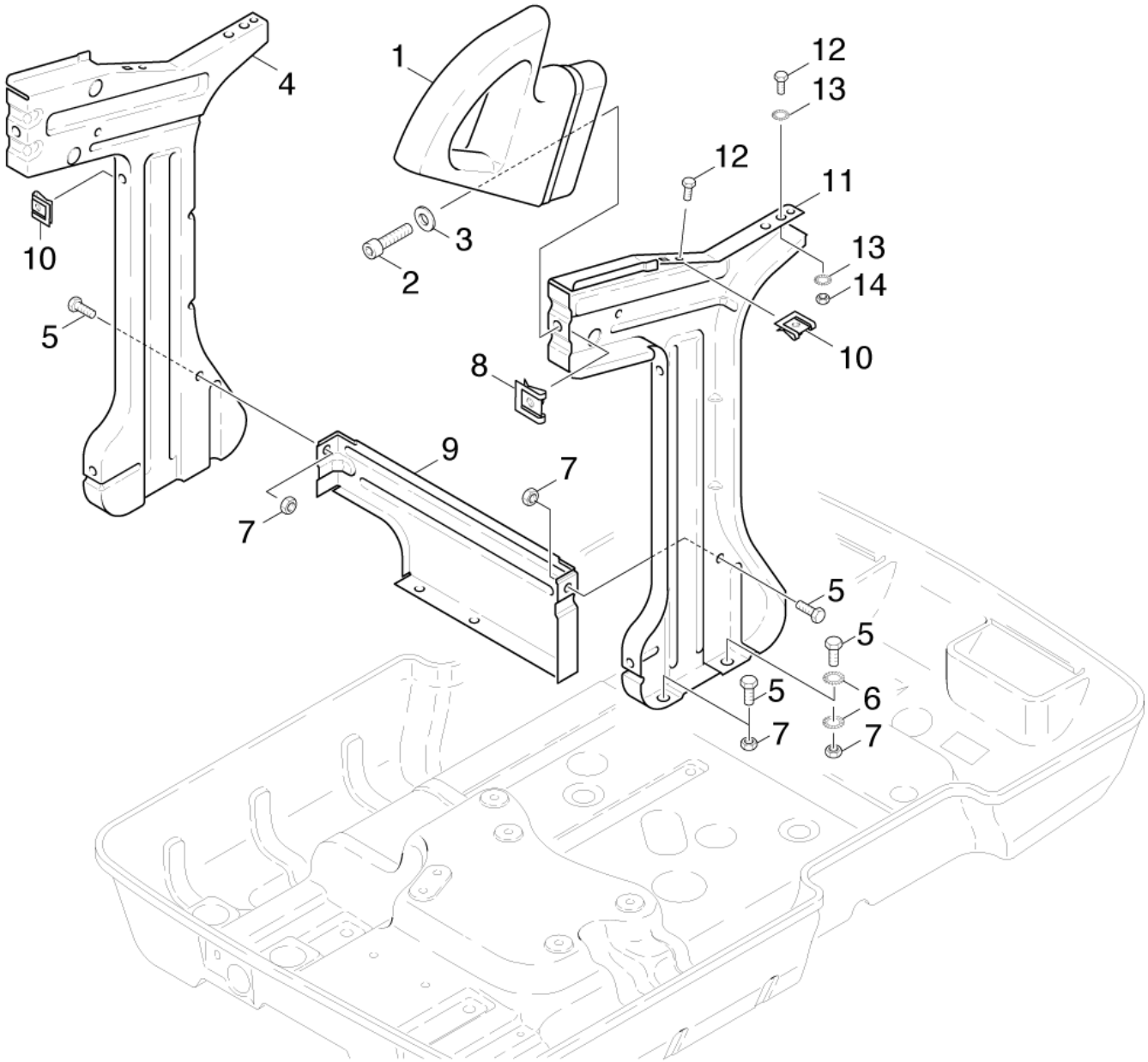

13 Handhold (0.102-717.0)

ET/VT (spare/wear parts)	Pos	Material #	Name	Qty.	Unit	from ser.nr.	up to ser.nr.
	1	5.321-647.0	Sliding handle	2.000	ST	0000000000	0000000000
X-X	2	7.306-049.0	Cylinder head screw M 8x45-8.8-A2E ISO	2.000	ST	0000000000	0000000000
X-X	3	7.312-004.0	Washer 8 -200HV-A3E ISO 7090	2.000	ST	0000000000	0000000000
	4	5.052-033.0	Stand left	1.000	ST	0000000000	0000000000
	5	7.304-395.0	Hexagonal head screw M8x16-8.8-A2E ISO	6.000	ST	0000000000	0000000000
X-X	6	7.312-166.0	Toothed lock washer A8,4-FSt-A3E DIN 67	4.000	ST	0000000000	0000000000
X-X	7	7.311-004.0	Hexagon nut M8 -8-A3E ISO 4032	6.000	ST	0000000000	0000000000
X	8	6.310-083.0	Putting nut M8	2.000	ST	0000000000	0000000000
	9	5.055-120.0	Stay	1.000	ST	0000000000	0000000000
	10	6.310-082.0	Putting nut M6	4.000	ST	0000000000	0000000000
	11	5.052-035.0	Stand right	1.000	ST	0000000000	0000000000
X	12	7.304-382.0	Hexagonal head screw M 6x12-8.8-A2E ISO	4.000	ST	0000000000	0000000000
X	13	7.312-167.0	Toothed lock washer A6,4-FSt-A3E DIN 67	4.000	ST	0000000000	0000000000
	14	7.311-003.0	Hexagon nut M6 -8-A2E ISO 4032	2.000	ST	0000000000	0000000000

20 Pump set (0.106-017.0)

Pos	Material #	Name	Qty.	Unit	from ser.nr.	up to ser.nr.
21	0.106-018.0	Piston	1.000	ST	0000000000	0000000000
22	0.108-582.0	Cylinder head	1.000	ST	0000000000	0000000000
23	0.107-547.0	Switch	1.000	ST	0000000000	0000000000

21 Piston (0.106-018.0)

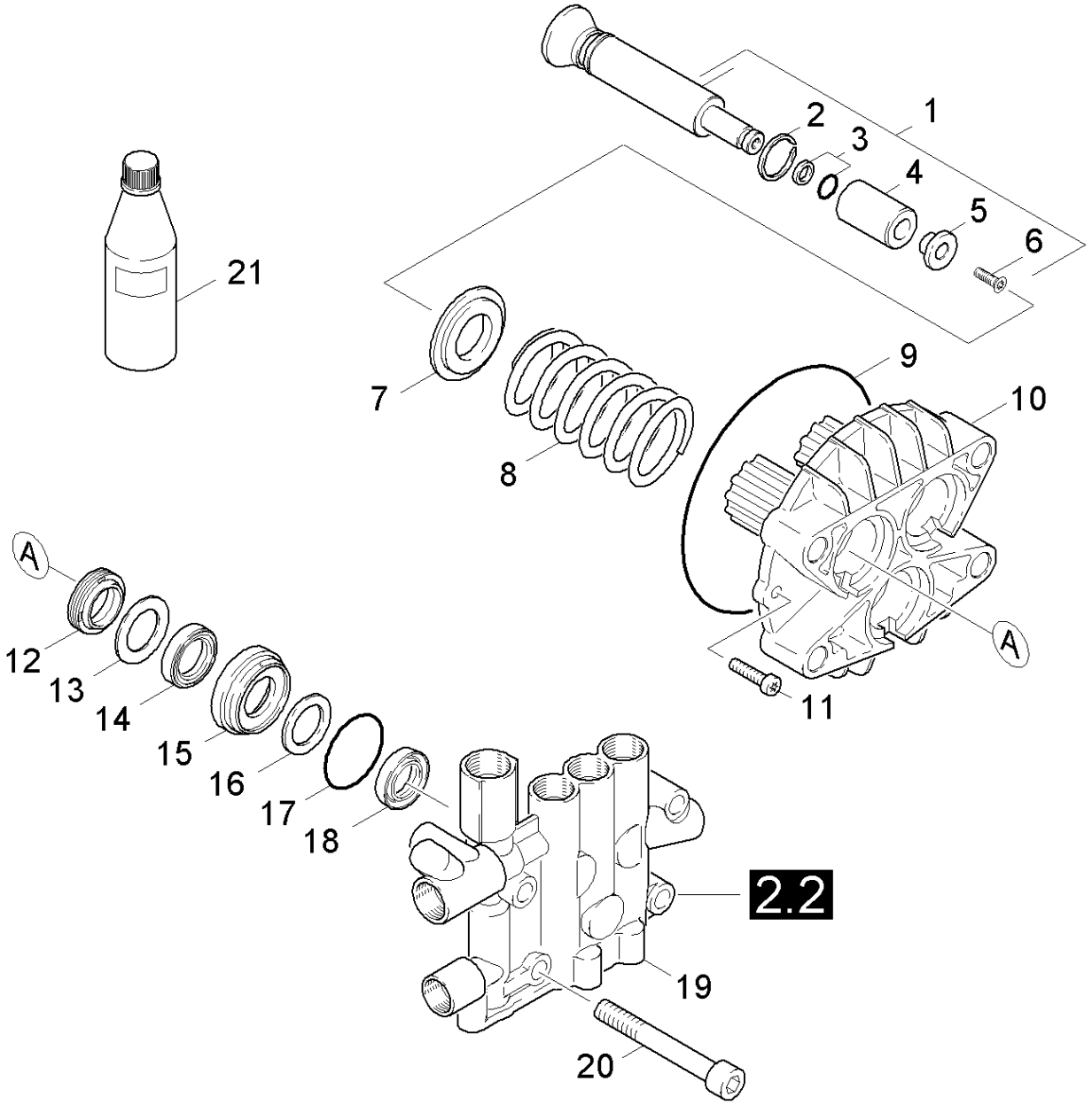

21 Piston (0.106-018.0)

ET/VT (spare/wear parts)	Pos	Material #	Name	Qty.	Unit	from ser.nr.	up to ser.nr.
X-X	1	4.553-281.0	Piston complete only for replacement	3.000	ST	0000000000	0000000000
X-X	2	6.472-331.0	Snap ring 20	3.000	ST	0000000000	0000000000
X-X	3	6.362-365.0	O-Ring seal complete 1ST.-R.- 7,65X 1,7	3.000	ST	0000000000	0000000000
X-X	4	5.110-220.0	Sleeve ceramic	3.000	ST	0000000000	0000000000
X-X	5	5.115-358.0	Washer	3.000	ST	0000000000	0000000000
X-X	6	6.305-004.0	Countersunk screw M 5X 20-A2-70-sw	3.000	ST	0000000000	0000000000
X-X	7	5.115-539.0	Washer	3.000	ST	0000000000	0000000000
X-X	8	5.332-289.0	Helical spring	3.000	ST	0000000000	0000000000
X-X	9	6.362-796.0	O-Ring seal 107,62X 2,62	1.000	ST	0000000000	0000000000
X	10	5.060-432.0	Housing	1.000	ST	0000000000	0000000000
X-X	11	7.306-105.0	Screw M6x30 -8.8-R3R (In6Rd)	2.000	ST	0000000000	0000000000
X-X	12	6.365-052.0	Grooved ring 20X28X6/8	3.000	ST	0000000000	0000000000
X-X	13	5.115-537.0	Washer	3.000	ST	0000000000	0000000000
X-X	14	6.365-053.0	Compact seal 20X30X6	3.000	ST	0000000000	0000000000
X-X	15	5.112-420.0	Bush	3.000	ST	0000000000	0000000000
X-X	16	5.115-538.0	Washer	3.000	ST	0000000000	0000000000
X-X	17	6.362-092.0	O-Ring seal 36,0 X 2,0-NBR 70	3.000	ST	0000000000	0000000000
X-X	18	6.365-330.0	Grooved ring	3.000	ST	0000000000	0000000000
X-X	19	4.550-607.0	Cylinder head complete only for replacem	1.000	ST	0000000000	0000000000
X-X	20	7.306-155.0	Cylinder head screw M12x100 -8.8-A3E IS	4.000	ST	0000000000	0000000000
X-X	21	6.288-016.0	Gear oil 1L	1.000	ST	0000000000	0000000000
X-X	100	2.883-913.0	Spare part set pump	1.000	ST	0000000000	0000000000

100 Spare part set pump (2.883-913.0)

ET/VT (spare/wear parts)	Pos	Material #	Name	Qty.	Unit
X-X	10	4.580-262.0	Valve complete	1.000	ST
X-X	20	2.884-512.0	Valve (3 Stueck)	2.000	ST
X-X	30	4.580-349.0	Valve complete chemistry	1.000	ST
X-X	50	4.582-019.0	Valve disc complete	1.000	ST
X-X	60	5.034-494.0	Retaining bracket	2.000	ST
X-X	70	5.115-537.0	Washer	3.000	ST
X-X	80	5.115-538.0	Washer	3.000	ST
X-X	90	5.115-796.0	Washer	2.000	ST
X	100	5.584-122.0	Valve pin	1.000	ST
X-X	110	6.362-151.0	O-Ring d. 10 x 2 NBR 70	1.000	ST
X-X	120	6.362-169.0	O-Ring seal 12,0 X 2,0	1.000	ST
X-X	130	6.362-368.0	O-Ring seal complete /1ST.-R.	2.000	ST
X-X	140	6.362-468.0	O-Ring seal complete 1ST.-R.	1.000	ST
X-X	150	6.362-481.0	O-Ring seal 14,0x2,0-NBR 80	6.000	ST
X-X	160	6.362-484.0	O-Ring seal 34,65X 1,78	3.000	ST
X-X	170	6.362-547.0	O-Ring seal 20,0x1,5-NBR 70	2.000	ST
X-X	180	6.362-796.0	O-Ring seal 107,62X 2,62	1.000	ST
X-X	190	6.363-003.0	O-Ring seal 13,0 X 2,0-NBR 90	6.000	ST
X-X	200	6.365-052.0	Grooved ring 20X28X6/8	3.000	ST
X-X	210	6.365-053.0	Compact seal 20X30X6	3.000	ST
X-X	220	6.365-330.0	Grooved ring	3.000	ST
	230	6.376-020.0	Label 65X55 MM	2.000	ZST

22 Cylinder head (0.108-582.0)

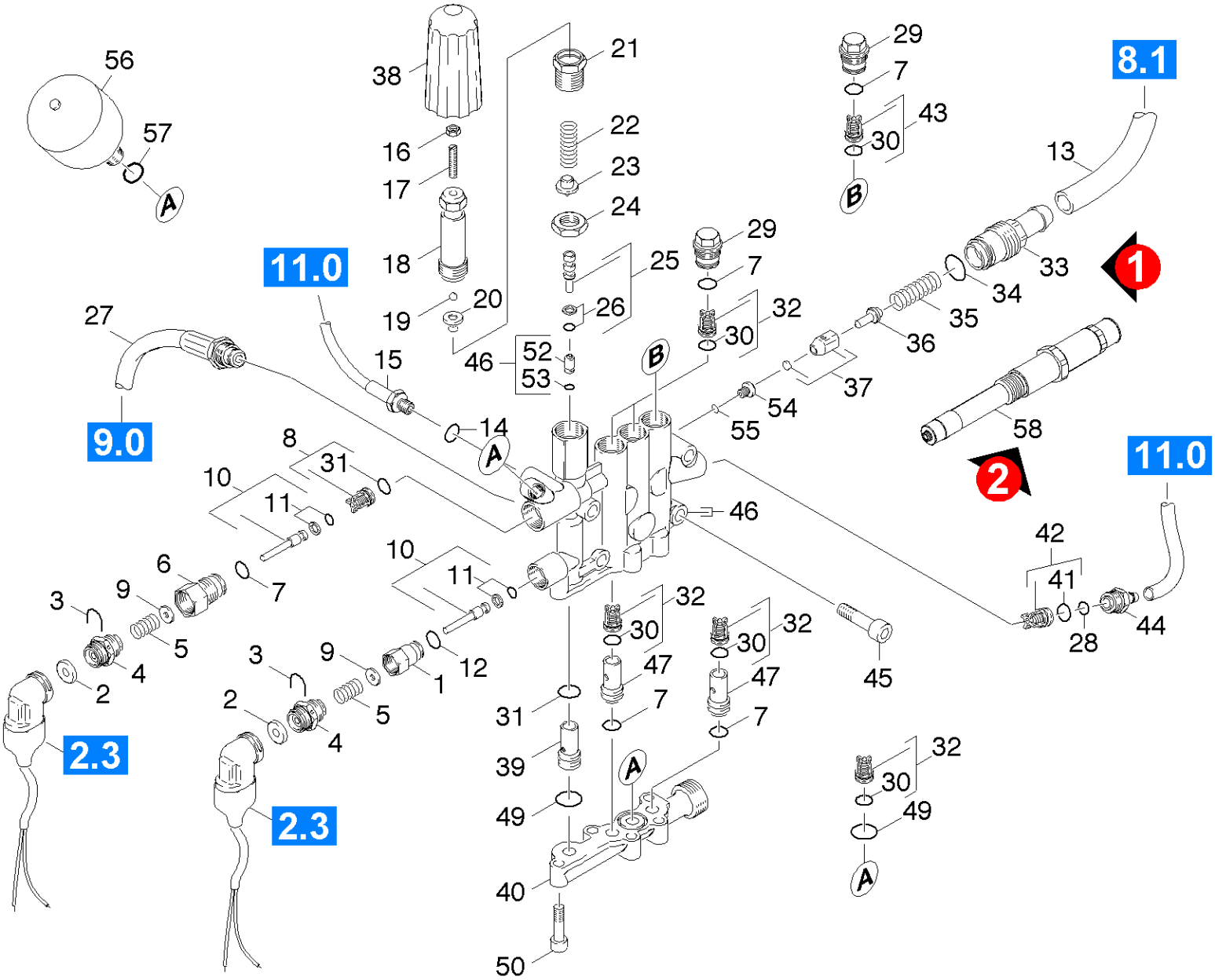

22 Cylinder head (0.108-582.0)

ET/VT (spare/wear parts)	Pos	Material #	Name	Qty.	Unit	from ser.nr.	up to ser.nr.	var. information	Footnote text
X-X	1	5.402-705.0	Joining piece	1.000	ST	0000000000	0000000000		
X-X	2	5.367-030.0	Diaphragm	2.000	ST	0000000000	0000000000		
X-X	3	5.034-494.0	Retaining bracket	2.000	ST	0000000000	0000000000		
X-X	4	5.411-148.0	Screw plug	2.000	ST	0000000000	0000000000		
X-X	5	5.332-268.0	Helical spring	2.000	ST	0000000000	0000000000		
X-X	6	5.583-161.0	Valve screw	1.000	ST	0000000000	0000000000		
X-X	7	6.362-481.0	O-Ring seal 14,0x2,0-NBR 80	6.000	ST	0000000000	0000000000		
X-X	8	4.580-262.0	Valve complete	1.000	ST	0000000000	0000000000		
X-X	9	5.115-796.0	Washer	2.000	ST	0000000000	0000000000		
X-X	10	4.553-197.0	Piston complete only for replacement	2.000	ST	0000000000	0000000000		
X-X	11	6.363-037.0	O-Ring seal complete 1ST.-R.	2.000	ST	0000000000	0000000000		
X-X	12	6.362-853.0	O-Ring seal 4,47x1,78	1.000	ST	0000000000	0000000000		
	13	6.388-167.0	Hose DN15	1.000	M	0000000000	0000000000		TO ORDER AS CUT GOOD
X-X	14	7.362-003.0	Joint ring A10x13,5 -Cu DIN 7603	1.000	ST	0000000000	0000000000		
X-X	15	6.389-635.0	High pressure hose	1.000	ST	0000000000	0000000000		
X-X	16	7.311-002.0	Hexagon nut M5 -8-A2E ISO 4032	1.000	ST	0000000000	0000000000		
X-X	17	7.307-017.0	Threaded pin M5x40 -St-45H-A2E ISO 4026	1.000	ST	0000000000	0000000000		
X-X	18	5.304-070.0	Hexagonal head screw	1.000	ST	0000000000	0000000000		
X-X	19	7.401-931.0	Sphere 5 Kl3 -1.4401 DIN 5401	1.000	ST	0000000000	0000000000		
X-X	20	5.582-121.0	Valve disc	1.000	ST	0000000000	0000000000		
X-X	21	5.404-082.0	Hollow screw	1.000	ST	0000000000	0000000000		
X-X	22	5.332-444.0	Helical spring	1.000	ST	0000000000	0000000000		
X-X	23	5.584-114.0	Valve pin	1.000	ST	0000000000	0000000000		
X-X	24	5.311-204.0	Hexagon nut M22x1,5	1.000	ST	0000000000	0000000000		
X-X	25	4.553-198.0	Piston complete only for replacement	1.000	ST	0000000000	0000000000		

22 Cylinder head (0.108-582.0)

ET/VT (spare/wear parts)	Pos	Material #	Name	Qty.	Unit	from ser.nr.	up to ser.nr.	var. information	Footnote text
X-X	26	6.362-468.0	O-Ring seal complete 1ST.-R.	1.000	ST	0000000000	0000000000		
X-X	27	4.440-790.0	Hose SDS	1.000	ST	0000000000	0000000000		
X-X	28	6.362-151.0	O-Ring d. 10 x 2 NBR 70	1.000	ST	0000000000	0000000000		
X-X	29	5.583-146.0	Valve screw	3.000	ST	0000000000	0000000000		
X-X	30	6.363-003.0	O-Ring seal 13,0 X 2,0-NBR 90	6.000	ST	0000000000	0000000000		
X-X	31	6.362-381.0	O-Ring seal 13x2 - NBR 70	2.000	ST	0000000000	0000000000		
X-X	32	2.884-512.0	Valve (3 Stueck)	1.000	ST	0000000000	0000000000		
	33	5.583-168.0	Valve screw safety valve	1.000	ST	0000000000	0000000000	VERSION 1	
X-X	34	6.362-169.0	O-Ring seal 12,0 X 2,0	1.000	ST	0000000000	0000000000	VERSION 1	
X	35	5.332-473.0	Helical spring	1.000	ST	0000000000	0000000000	VERSION 1	
X	36	5.584-122.0	Valve pin	1.000	ST	0000000000	0000000000	VERSION 1	
X-X	37	4.582-019.0	Valve disc complete	1.000	ST	0000000000	0000000000	VERSION 1	
X-X	38	5.321-579.0	Handle	1.000	ST	0000000000	0000000000		
X-X	39	5.110-865.0	Sleeve	1.000	ST	0000000000	0000000000		
	40	5.587-202.0	Valve housing	1.000	ST	0000000000	0000000000		
X-X	41	6.362-077.0	O-Ring seal 10 x 2,2 NBR 70	1.000	ST	0000000000	0000000000		
X-X	42	4.580-349.0	Valve complete chemistry	1.000	ST	0000000000	0000000000		
X-X	43	4.580-589.0	Valve with slot	1.000	ST	0000000000	0000000000		
X-X	44	5.443-474.0	Hose stem	1.000	ST	0000000000	0000000000		
X-X	45	7.306-155.0	Cylinder head screw M12x100 -8.8-A3E IS	4.000	ST	0000000000	0000000000		
X-X	46	4.550-607.0	Cylinder head complete only for replacem	1.000	ST	0000000000	0000000000		
X-X	47	5.110-853.0	Sleeve	2.000	ST	0000000000	0000000000		
X-X	49	6.362-547.0	O-Ring seal 20,0x1,5-NBR 70	2.000	ST	0000000000	0000000000		
X-X	50	7.306-043.0	Cylinder head screw M8x30 -8.8-A2E ISO	5.000	ST	0000000000	0000000000		
X-X	52	5.581-239.0	Valve seat	1.000	ST	0000000000	0000000000		

22 Cylinder head (0.108-582.0)

ET/VT (spare/wear parts)	Pos	Material #	Name	Qty.	Unit	from ser.nr.	up to ser.nr.	var. information	Footnote text
X-X	53	6.362-386.0	O-Ring seal 5,0 x 1,5-NBR 80	1.000	ST	0000000000	0000000000		
X-X	54	5.581-231.0	Valve seat	1.000	ST	0000000000	0000000000	VERSION 1	
X-X	55	6.362-703.0	O-Ring seal 6,0x1,5-NBR 70	1.000	ST	0000000000	0000000000	VERSION 1	
X-X	56	6.505-054.0	Pressure accumulator	1.000	ST	0000000000	0000000000		
X	57	6.362-176.0	O-Ring seal 6,07x1,78	1.000	ST	0000000000	0000000000		
	58	4.580-727.0	Safety valve kpl. Ersatz	1.000	ST			VERSION 2	
X-X	100	2.883-913.0	Spare part set pump	1.000	ST	0000000000	0000000000		

100 Spare part set pump (2.883-913.0)

ET/VT (spare/wear parts)	Pos	Material #	Name	Qty.	Unit
X-X	10	4.580-262.0	Valve complete	1.000	ST
X-X	20	2.884-512.0	Valve (3 Stueck)	2.000	ST
X-X	30	4.580-349.0	Valve complete chemistry	1.000	ST
X-X	50	4.582-019.0	Valve disc complete	1.000	ST
X-X	60	5.034-494.0	Retaining bracket	2.000	ST
X-X	70	5.115-537.0	Washer	3.000	ST
X-X	80	5.115-538.0	Washer	3.000	ST
X-X	90	5.115-796.0	Washer	2.000	ST
X	100	5.584-122.0	Valve pin	1.000	ST
X-X	110	6.362-151.0	O-Ring d. 10 x 2 NBR 70	1.000	ST
X-X	120	6.362-169.0	O-Ring seal 12,0 X 2,0	1.000	ST
X-X	130	6.362-368.0	O-Ring seal complete /1ST.-R.	2.000	ST
X-X	140	6.362-468.0	O-Ring seal complete 1ST.-R.	1.000	ST
X-X	150	6.362-481.0	O-Ring seal 14,0x2,0-NBR 80	6.000	ST
X-X	160	6.362-484.0	O-Ring seal 34,65X 1,78	3.000	ST
X-X	170	6.362-547.0	O-Ring seal 20,0x1,5-NBR 70	2.000	ST
X-X	180	6.362-796.0	O-Ring seal 107,62X 2,62	1.000	ST
X-X	190	6.363-003.0	O-Ring seal 13,0 X 2,0-NBR 90	6.000	ST
X-X	200	6.365-052.0	Grooved ring 20X28X6/8	3.000	ST
X-X	210	6.365-053.0	Compact seal 20X30X6	3.000	ST
X-X	220	6.365-330.0	Grooved ring	3.000	ST
	230	6.376-020.0	Label 65X55 MM	2.000	ZST

23 Switch (0.107-547.0)

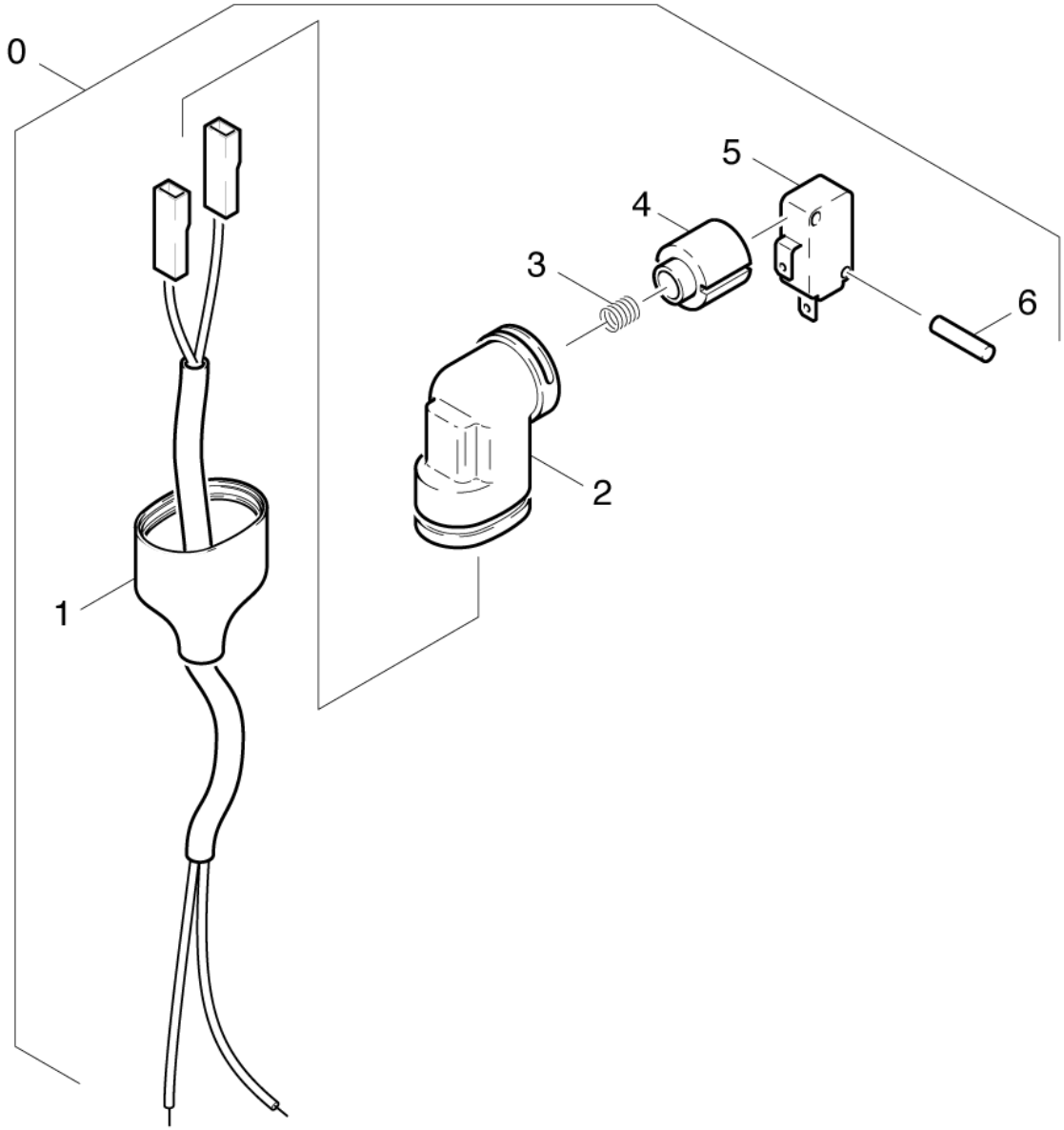

23 Switch (0.107-547.0)

ET/VT (spare/wear parts)	Pos	Material #	Name	Qty.	Unit	from ser.nr.	up to ser.nr.
X-X	0	4.744-241.0	Switch kpl. -nur fuer Ersatz-	2.000	ST	0000000000	0000000000
	1	6.648-111.0	Control cable	1.000	ST	0000000000	0000000000
X-X	2	5.042-860.0	Holder	1.000	ST	0000000000	0000000000
	3	5.332-322.0	Spring	1.000	ST	0000000000	0000000000
	4	5.053-051.0	Bracket	1.000	ST	0000000000	0000000000
X-X	5	6.631-807.0	Micro switch	1.000	ST	0000000000	0000000000
X-X	6	7.314-664.0	Straight grooved pin 3,0x20-KU ISO 8740	1.000	ST	0000000000	0000000000

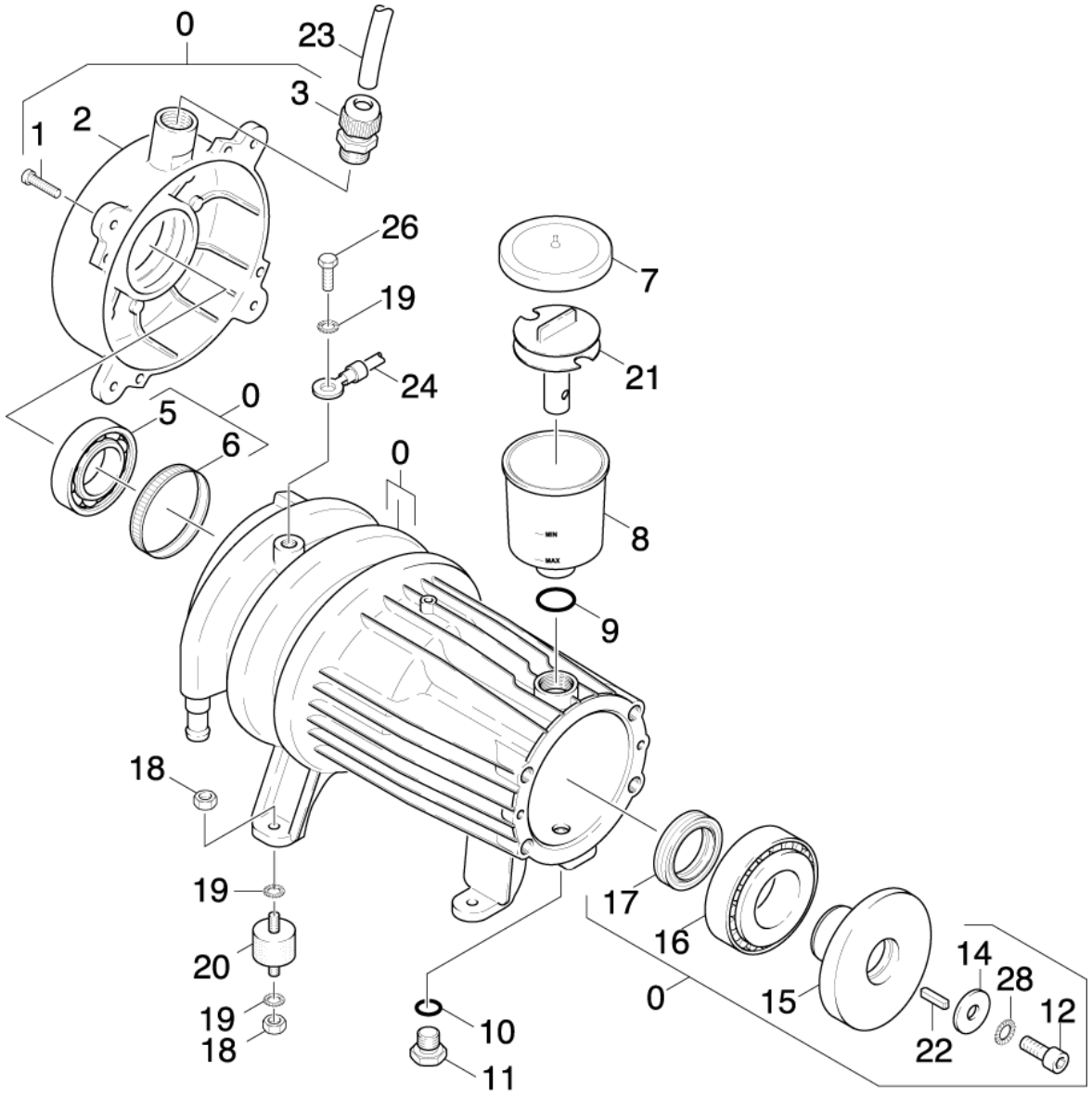
0
23
3
1
2
26
19
24
7
21
0
5
6
0
8
9
18
19
20
19
18
10
11
17
16
15
0
14
28
12
22

30 Motor (0.111-049.0)

ET/VT (spare/wear parts)	Pos	Material #	Name	Qty.	Unit	from ser.nr.	up to ser.nr.	Footnote text
	0	4.623-763.0	Motor complete	1.000	ST	0000000000	0000000000	FOR BLOWER (GR. 4.0) VERSION 2
Position text: / 1.027-514.0								
	0	4.623-764.0	Motor complete	1.000	ST	0000000000	0000000000	FOR BLOWER (GR. 4.0) VERSION 2
Position text: / 1.027-515.0								
	0	4.623-821.0	Motor complete only for replacement	1.000	ST			
Position text: 1.027-360.0								
	0	4.624-056.0	Motor complete only for replacement	1.000	ST			
Position text: 1.027-361.0								
	0	4.623-761.0	Motor complete	1.000	ST			FOR BLOWER (GR. 4.0) VERSION 2
Position text: 1.027-317.0								
	0	4.623-760.0	Motor complete	1.000	ST	0000000000	0000000000	FOR BLOWER (GR. 4.0) VERSION 2
Position text: / 1.027-316.0 / -324.0								
	0	4.623-477.0	Motor complete	1.000	ST	0000000000	0000000000	FOR BLOWER (GR. 4.0) VERSION 1
Position text: / 1.027-315.0 / -316.0 / -318.0/ -322.0 / -323.0 / -324.0 / -329.0 /								
	0	4.623-687.0	Motor complete	1.000	ST	0000000000	0000000000	FOR BLOWER (GR. 4.0) VERSION 1
Position text: / 1.027-514.0								
	0	4.623-756.0	Motor complete	1.000	ST	0000000000	0000000000	FOR BLOWER (GR. 4.0) VERSION 2
Position text: / 1.027-315.0 / -318.0/ -322.0/ -323.0 / -328.0 / -503.0 /								
	0	4.623-295.0	Motor complete	1.000	ST	0000000000	0000000000	FOR BLOWER (GR. 4.0) VERSION 1
Position text: / 1.027-515.0								
	1	7.303-048.0	Screw M6x20 -St-R3R (In6Rd)	4.000	ST	0000000000	0000000000	
	2	5.063-452.0	Cover	1.000	ST	0000000000	0000000000	
	3	6.641-356.0	Cable gland PG16	1.000	ST	0000000000	0000000000	
X-X	5	6.401-253.0	Ball bearing 6305-2Z	1.000	ST	0000000000	0000000000	
X-X	6	6.343-010.0	Tolerance ring 62x10	1.000	ST	0000000000	0000000000	

ET/VT (spare/wear parts)	Pos	Material #	Name	Qty.	Unit	from ser.nr.	up to ser.nr.	Footnote text
X-X	7	5.063-189.0	Cover	1.000	ST	0000000000	0000000000	
X-X	8	5.070-048.0	Box	1.000	ST	0000000000	0000000000	
X-X	9	6.362-168.0	O-Ring seal 22,3 X 2,4-NBR 70	1.000	ST	0000000000	0000000000	
X	10	6.363-273.0	O-Ring seal 11,0 x 2,0	1.000	ST	0000000000	0000000000	
	11	5.411-100.0	Screw plug	1.000	ST	0000000000	0000000000	
X	12	7.306-041.0	Cylinder head screw M8x20 -8.8-A2E ISO	1.000	ST	0000000000	0000000000	
	14	5.115-565.0	Washer	1.000	ST	0000000000	0000000000	
	15	5.120-282.0	Wobble plate	1.000	ST			
Position text: 1.027-361.0								
	15	5.120-235.0	Wobble plate	1.000	ST	0000000000	0000000000	
Position text: / 1.027-315.0 / -316.0 / -318.0 / -322.0 / -323.0 / -324.0 / -328.0 / -329.0 / -503.0								
	15	4.120-241.0	Wobble plate -nur für Ersatz-	1.000	ST			
Position text: 1.027-317.0								
	15	5.120-380.0	Wobble plate	1.000	ST	0000000000	0000000000	
Position text: / 1.027-514.0 /-360.0 /								
	15	5.120-263.0	Wobble plate	1.000	ST	0000000000	0000000000	
Position text: / 1.027-515.0								
X-X	16	6.401-225.0	Taper roller bearing 41	1.000	ST	0000000000	0000000000	
X-X	17	7.367-009.0	Radial shaft seal ring A35x52x7-NBR DIN	1.000	ST	0000000000	0000000000	
X-X	18	7.311-004.0	Hexagon nut M8 -8-A3E ISO 4032	8.000	ST	0000000000	0000000000	
X-X	19	7.312-166.0	Toothed lock washer A8,4-FSt-A3E DIN 67	9.000	ST	0000000000	0000000000	
X-X	20	6.339-060.0	Rubber buffer M8	4.000	ST	0000000000	0000000000	
	21	5.030-389.0	Moulded part	1.000	ST	0000000000	0000000000	
X	22	7.318-035.0	Parallel key 8x7x25 -C45R DIN 6885-1	1.000	ST	0000000000	0000000000	
	23	6.642-011.0	Insulating hose 10	2.000	M	0000000000	0000000000	TO ORDER AS CUT GOODS

30 Motor (0.111-049.0)

ET/VT (spare/wear parts)	Pos	Material #	Name	Qty.	Unit	from ser.nr.	up to ser.nr.	Footnote text
	24	4.820-430.0	Cable green/yellow 1,5mm²x450mm	1.000	ST	0000000000	0000000000	
	26	6.303-031.0	Screw M8x16-ST-A2R DIN 7500-1	1.000	ST	0000000000	0000000000	
	28	7.312-159.0	Toothed lock washer A8,4-FST-PH DIN 679	1.000	ST	0000000000	0000000000	

40 Blower (0.116-215.0)

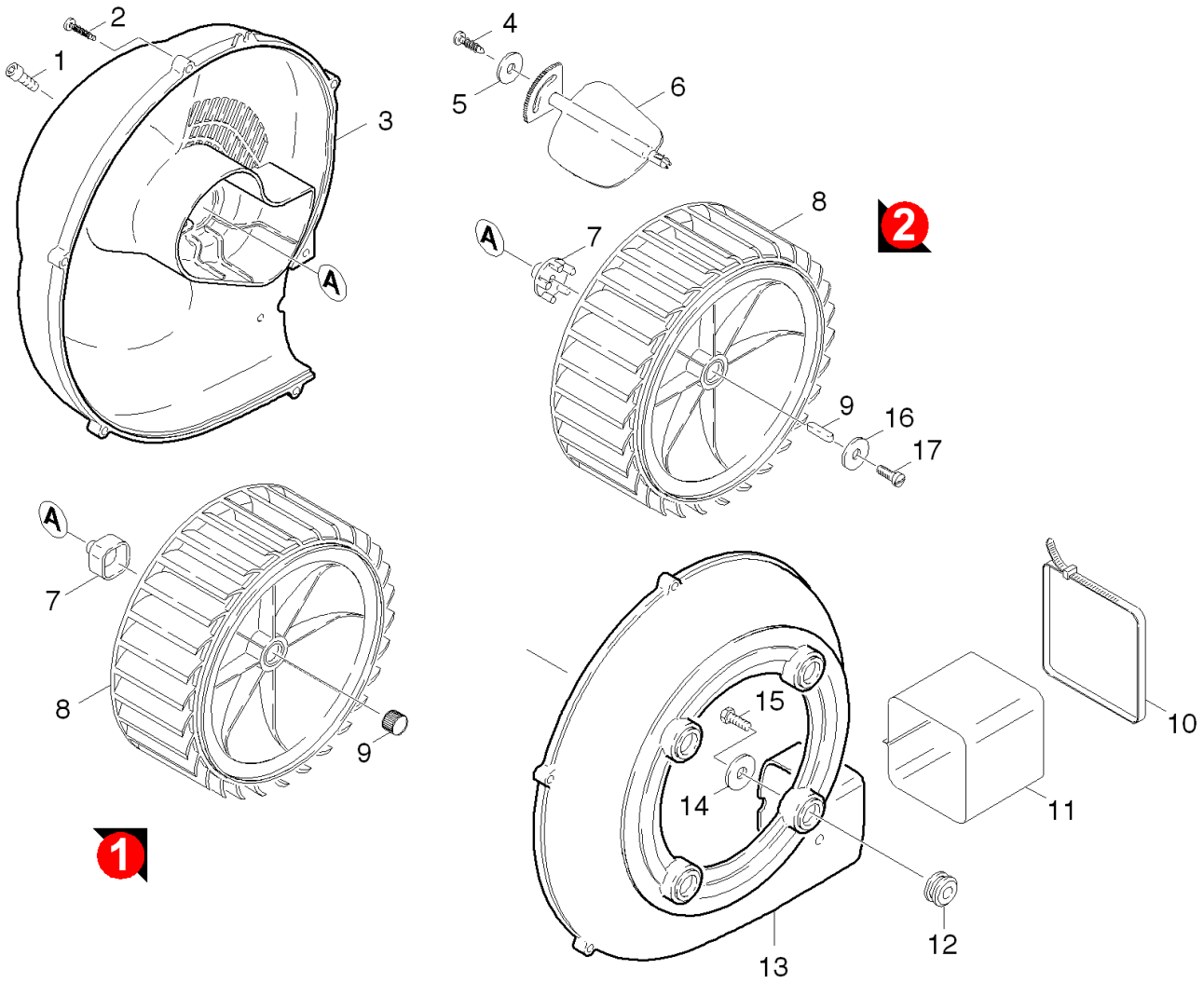

40 Blower (0.116-215.0)

ET/VT (spare/wear parts)	Pos	Material #	Name	Qty.	Unit	from ser.nr.	up to ser.nr.	Footnote text
	1	7.306-090.0	Screw M6x16 -8.8-R3R (In6Rd)	1.000	ST	0000000000	0000000000	
	2	7.303-084.0	Screw 4x25 -10.9-R2R (K-In6Rd)	6.000	ST	0000000000	0000000000	
X-X	3	5.063-457.0	Cover blower	1.000	ST	0000000000	0000000000	
X-X	4	7.303-077.0	Sheet metal screw ST4,8X16-ST-A2R (IN6R	1.000	ST	0000000000	0000000000	
X-X	5	7.312-278.0	Washer 5-200HV-A2E ISO7093-1	1.000	ST	0000000000	0000000000	
X-X	6	5.606-005.0	Air flap	1.000	ST	0000000000	0000000000	
X-X	7	5.471-097.0	Coupler fuel pump	1.000	ST	0000000000	0000000000	VERSION 2
X-X	7	5.471-060.0	Coupling element	1.000	ST	0000000000	0000000000	VERSION 1
X-X	8	5.600-045.0	Blower wheel	1.000	ST	0000000000	0000000000	VERSION 1
X-X	8	5.600-080.0	Blower wheel with groove	1.000	ST	0000000000	0000000000	VERSION 2
X-X	9	7.318-058.0	Parallel key 4x4x20-1.4301 DIN 6885	1.000	ST	0000000000	0000000000	VERSION 2
X-X	9	6.343-027.0	Tolerance ring D17X16	1.000	ST	0000000000	0000000000	VERSION 1
X-X	10	6.388-608.0	Tightening strap	2.000	ST	0000000000	0000000000	
X-X	11	5.178-026.0	Cloth collar	1.000	ST	0000000000	0000000000	
	12	5.379-019.0	Rubber ring	4.000	ST	0000000000	0000000000	
	13	5.605-168.0	Housing blower	1.000	ST	0000000000	0000000000	
X-X	14	7.312-260.0	Washer 6 -100HV-A3E ISO 7094	4.000	ST	0000000000	0000000000	
	15	7.303-048.0	Screw M6x20 -St-R3R (In6Rd)	4.000	ST	0000000000	0000000000	
X	16	7.312-264.0	Washer 5-100HV-A3E ISO 7094	1.000	ST	0000000000	0000000000	VERSION 2
X	17	7.306-071.0	Screw M5x10 -8.8-R2R (In6Rd)	1.000	ST	0000000000	0000000000	VERSION 2

50 Fuel system (0.121-257.0)

Pos	Material #	Name	Qty.	Unit	from ser.nr.	up to ser.nr.
51	0.121-258.0	Fuel pump aspiration	1.000	ST	0000000000	0000000000
52	0.121-254.0	Fuel pump	1.000	ST	0000000000	0000000000

51 Fuel pump aspiration (0.121-258.0)

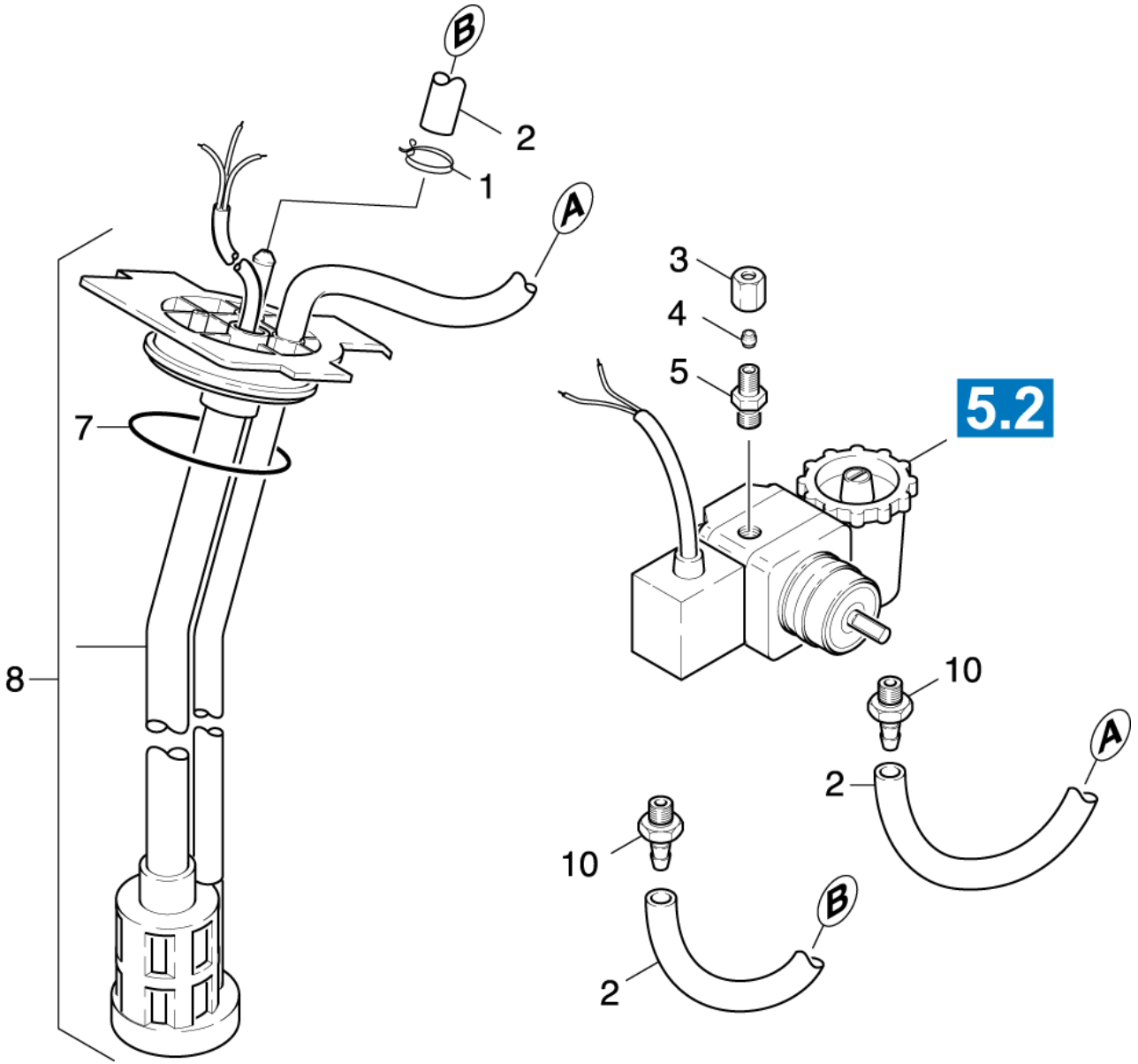

51 Fuel pump aspiration (0.121-258.0)

ET/VT (spare/wear parts)	Pos	Material #	Name	Qty.	Unit	from ser.nr.	up to ser.nr.	Footnote text
	1	6.389-768.0	Hose clip	1.000	ST	0000000000	0000000000	
X-X	2	6.389-534.0	Hose	1.000	M	0000000000	0000000000	TO ORDER AS CUT GOODS
X-X	3	6.389-262.0	Union nut A 4-LL	1.000	ST	0000000000	0000000000	
X-X	4	6.389-263.0	Cutting ring d.4	1.000	ST	0000000000	0000000000	
X-X	5	6.389-261.0	Screw union	1.000	ST	0000000000	0000000000	
	7	6.362-855.0	O-Ring seal 56,0 X 4,0	1.000	ST	0000000000	0000000000	
	8	4.421-631.0	Pipelines BR.ST.	1.000	ST	0000000000	0000000000	
X-X	10	6.472-927.0	Hose stem only for replacement	2.000	ST	0000000000	0000000000	

52 Fuel pump (0.121-254.0)

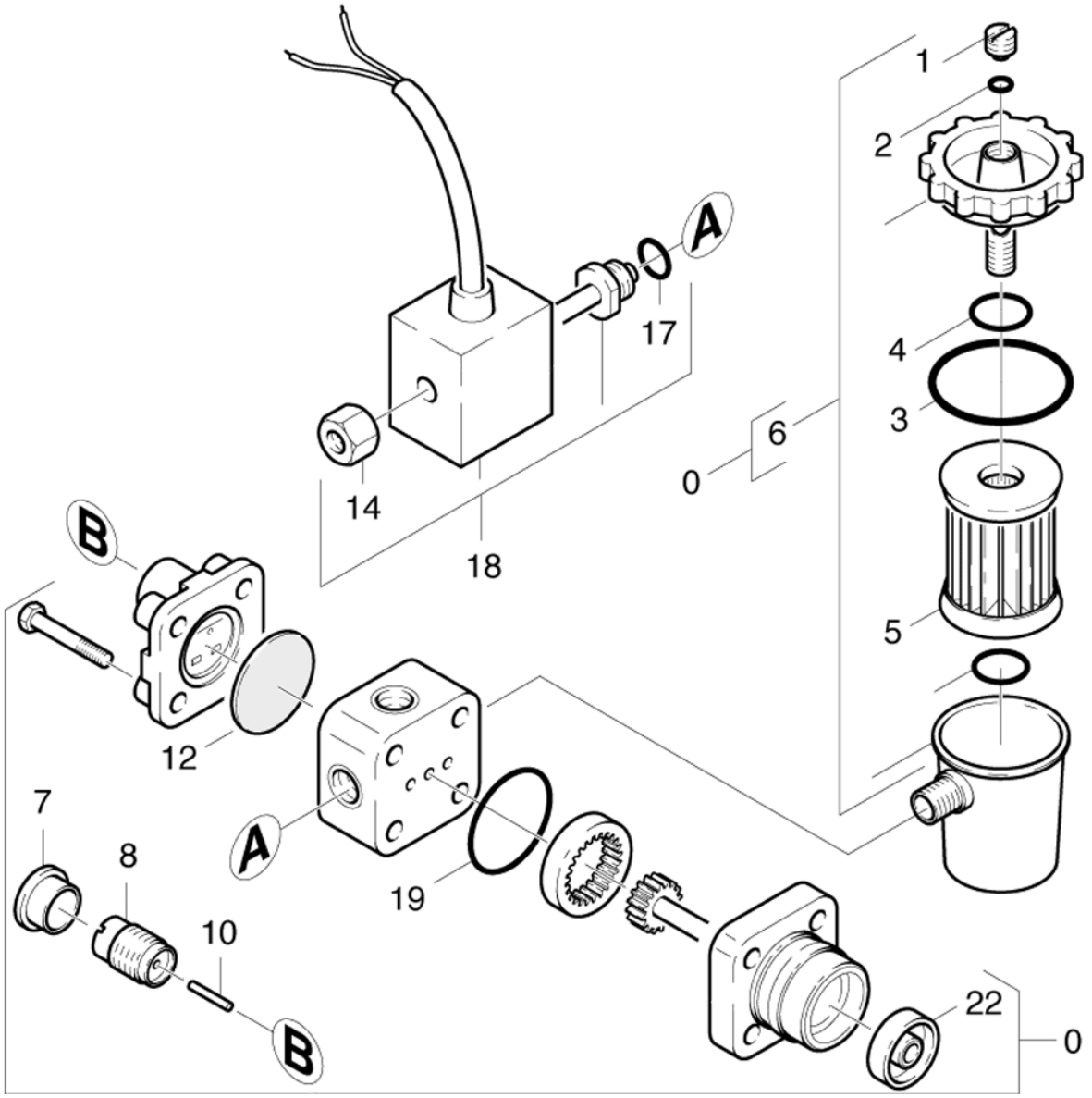

52 Fuel pump (0.121-254.0)

ET/VT (spare/wear parts)	Pos	Material #	Name	Qty.	Unit	from ser.nr.	up to ser.nr.
X-X	0	6.472-925.0	Pump oil burner only for replacement	1.000	ST	0000000000	0000000000
	1	6.472-107.0	Screw ventilation	1.000	ST	0000000000	0000000000
X	2	6.472-106.0	O-Ring seal 5,0 X 1,8	1.000	ST	0000000000	0000000000
X-X	3	6.472-111.0	O-Ring seal 32,0 X 1,6	1.000	ST	0000000000	0000000000
X-X	4	6.472-112.0	O-Ring seal 10,0 X 2,4	1.000	ST	0000000000	0000000000
X-X	5	6.472-113.0	Filter cartridge	1.000	ST	0000000000	0000000000
	6	6.472-123.0	Filter housing complete	1.000	ST	0000000000	0000000000
	7	6.472-122.0	Protecting cap	1.000	ST	0000000000	0000000000
	8	6.472-109.0	Housing spring	1.000	ST	0000000000	0000000000
	10	6.472-108.0	Pin	1.000	ST	0000000000	0000000000
X-X	12	6.472-128.0	Diaphragm	1.000	ST	0000000000	0000000000
	14	6.472-340.0	Knurled nut	1.000	ST	0000000000	0000000000
	17	6.472-125.0	O-Ring seal 12,0 X 1,5	1.000	ST	0000000000	0000000000
X-X	18	6.472-411.0	Solenoid valve	1.000	ST	0000000000	0000000000
X-X	19	6.472-120.0	O-Ring seal 28,5 X 1,6	1.000	ST	0000000000	0000000000
	22	6.472-105.0	Seal axle	1.000	ST	0000000000	0000000000

60 Electric control box (0.126-004.0)

Pos	Material #	Name	Qty.	Unit	from ser.nr.	up to ser.nr.
61	0.126-013.0	Top part	1.000	ST	0000000000	0000000000
62	0.126-014.0	Bottom part	1.000	ST	0000000000	0000000000

61 Top part (0.126-013.0)

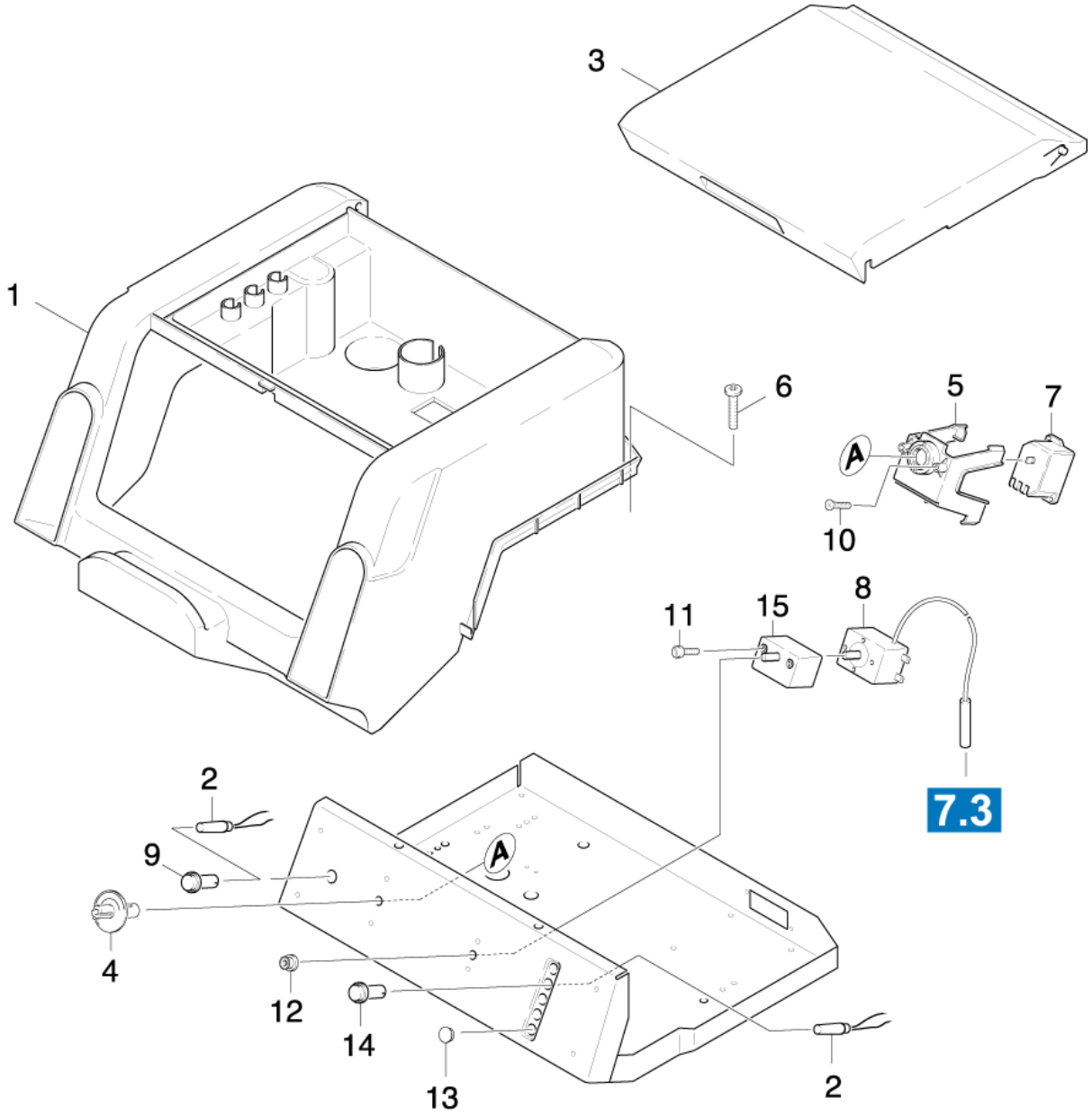

61 Top part (0.126-013.0)

ET/VT (spare/wear parts)	Pos	Material #	Name	Qty.	Unit	from ser.nr.	up to ser.nr.
	1	5.067-198.0	Cover	1.000	ST	0000000000	0000000000
X-X	2	6.651-275.0	Pilot lamp	4.000	ST	0000000000	0000000000
X-X	3	5.031-914.0	Flap	1.000	ST	0000000000	0000000000
	4	5.100-335.0	Shaft switch CONDOR	1.000	ST	0000000000	0000000000
	5	5.044-412.0	Holder (CONDOR-SCHAER)	1.000	ST	0000000000	0000000000
X	6	7.303-045.0	Screw M5X 55-ST-A2R (IN6RD)	2.000	ST	0000000000	0000000000
X-X	7	6.631-428.0	Motor protecting switch -22-27A	1.000	ST	0000000000	0000000000
Position text: / 1.027-316.0 / -317.0 / -324.0 /							
X-X	7	6.631-196.0	Motor protecting switch	1.000	ST	0000000000	0000000000
Position text: / 1.027-514.0 / -515.0							
X-X	7	6.631-190.0	Motor protecting switch	1.000	ST	0000000000	0000000000
Position text: / 1.027-315.0 / -318.0 / -322.0 / -323.0 / -328.0 / -329.0 / -360.0 / -361.0 / -503.0							
X-X	8	6.686-173.0	Thermostat	1.000	ST	0000000000	0000000000
	9	6.651-421.0	Lens housing green	1.000	ST	0000000000	0000000000
	10	7.303-125.0	Countersunk screw 4x16 -10.9-R2R (In6Rd	2.000	ST	0000000000	0000000000
	11	7.306-236.0	Screw M4x6 -8.8-R2R (In6Rd)	2.000	ST	0000000000	0000000000
	12	5.365-152.0	Profile gasket	1.000	ST	0000000000	0000000000
X-X	13	6.368-076.0	Ornamental hub cap D10/D12	2.000	ST	0000000000	0000000000
X-X	14	6.651-316.0	Lens housing red	3.000	ST	0000000000	0000000000
X-X	15	6.630-368.0	Switch	1.000	ST	0000000000	0000000000

62 Bottom part (0.126-014.0)

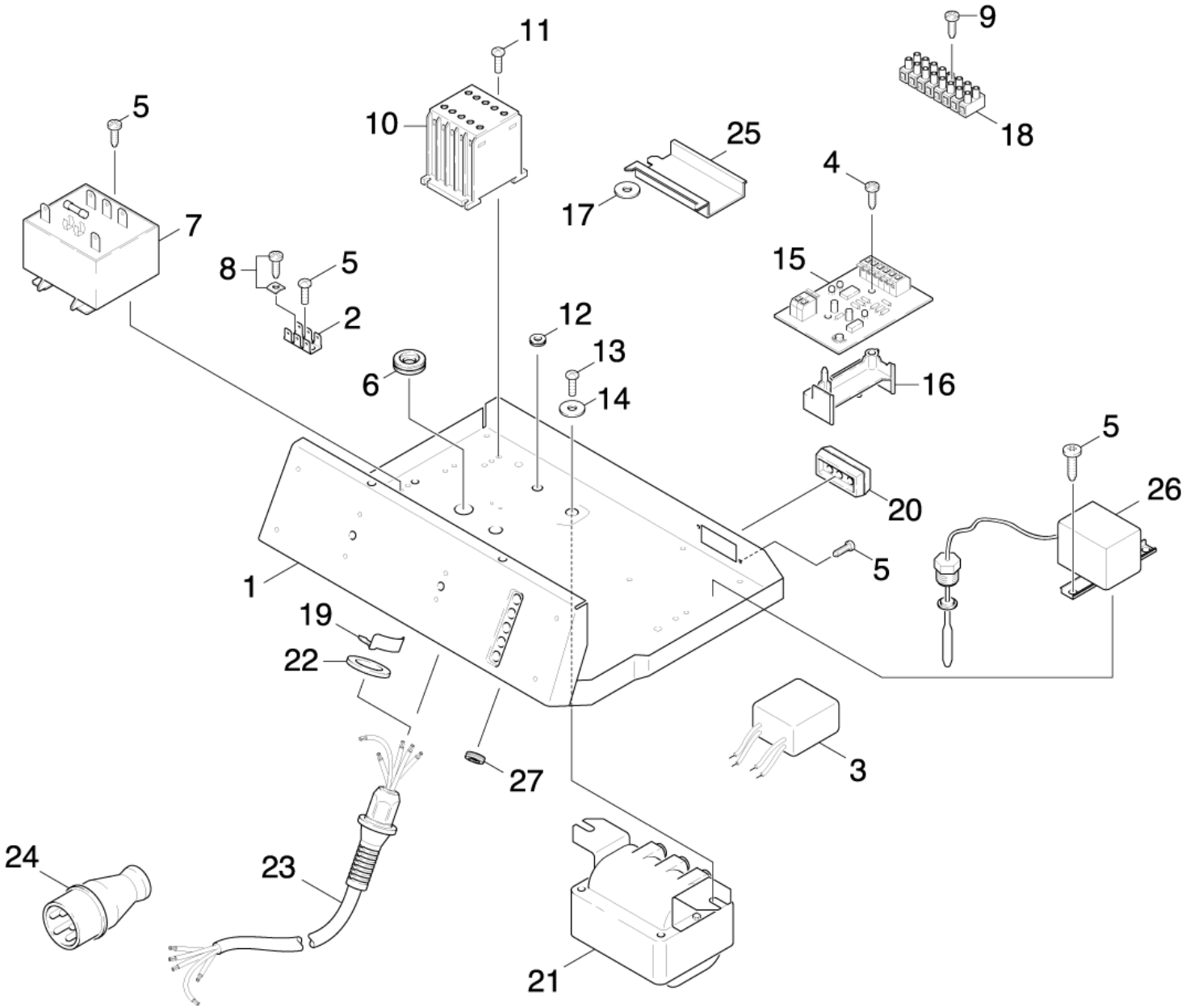

62 Bottom part (0.126-014.0)

ET/VT (spare/wear parts)	Pos	Material #	Name	Qty.	Unit	from ser.nr.	up to ser.nr.
	1	5.049-657.0	Sheet metal component electric control b	1.000	ST	0000000000	0000000000
Position text: / 1.027-316.0 / -317.0 / -324.0 / -361.0							
	1	5.049-551.0	Sheet metal component	1.000	ST	0000000000	0000000000
Position text: / 1.027-315.0 / -318.0 / -322.0 / -323.0 / -328.0 / -329.0 / -360.0 /-503.0							
	2	6.641-270.0	Plug	1.000	ST	0000000000	0000000000
	3	6.661-229.0	Interference suppressor	1.000	ST	0000000000	0000000000
	4	7.303-035.0	Screw M4x30 -St-R2R (In6Rd)	1.000	ST	0000000000	0000000000
	5	7.303-030.0	Screw M4x8 -St-P2R (In6Rd)	6.000	ST	0000000000	0000000000
	6	5.365-158.0	Profile gasket	1.000	ST	0000000000	0000000000
X-X	7	6.622-241.0	Control transformer 400V	1.000	ST	0000000000	0000000000
Position text: / 1.027-315.0 / -318.0 / -322.0 / -323.0 / -328.0 / -329.0 / -360.0 / -361.0 / -503.0							
X	7	4.622-018.0	Control transformer -nur für Ersatz-	1.000	ST	0000000000	0000000000
Position text: / 1.027-316.0 / -317.0 / -324.0 / -514.0/ -515.0							
	8	6.303-317.0	Screw M4x10-St-A2G	2.000	ST	0000000000	0000000000
	9	7.303-501.0	Self-tapping screw M3x20-ST-A2E DIN 7500	4.000	ST	0000000000	0000000000
X-X	10	4.632-002.0	Contactor -nur fuer Ersatz-	1.000	ST	0000000000	0000000000
Position text: / 1.027-315.0 / -318.0 / -322.0 / -323.0 / -328.0 / -329.0 / -360.0 / -361.0 / -503.0							
X-X	10	6.632-356.0	Contactor LC1-D18B7SV30	1.000	ST	0000000000	0000000000
Position text: / 1.027-316.0 / -317.0 / -324.0 / -514.0/ -515.0							
	11	7.303-033.0	Screw M4x16-ST-A2R (KOMBI-IN6RD	2.000	ST	0000000000	0000000000
X-X	12	6.641-422.0	Wire protecting sleeve	1.000	ST	0000000000	0000000000
X	13	7.303-036.0	Screw M5x8 -St-A2R (In6Rd)	1.000	ST	0000000000	0000000000
X-X	14	7.312-260.0	Washer 6 -100HV-A3E ISO 7094	1.000	ST	0000000000	0000000000
	15	6.633-509.0	Circuit board pulse generator *J	1.000	ST	0000000000	0000000000
Position text: 1.027-514.0 / -515.0							

62 Bottom part (0.126-014.0)

ET/VT (spare/wear parts)	Pos	Material #	Name	Qty.	Unit	from ser.nr.	up to ser.nr.
X-X	15	6.633-372.0	Pulse generator	1.000	ST	0000000000	0000000000
Position text: 1.027-315.0 /-316.0 /-317.0 /-318.0 / -322.0 /-323.0 /-324.0 /-329.0 /-360.0 /-361.0 /-503.0							
	16	5.057-043.0	Support	1.000	ST	0000000000	0000000000
X-X	17	7.312-282.0	Washer 5 -A2 ISO 7093-1	1.000	ST	0000000000	0000000000
Position text: / 1.027-361.0 /-514.0 /-515.0							
	18	6.643-249.0	Strip terminal	1.000	ZST	0000000000	0000000000
	19	6.343-170.0	Retaining clip	1.000	ST	0000000000	0000000000
Position text: / 1.027-315.0 / -318.0 / -322.0 / -323.0 / -328.0 / -329.0 / -360.0 /-503.0							
X	19	6.343-186.0	Locking ring	1.000	ST	0000000000	0000000000
Position text: / 1.027-316.0 / -317.0 /-324.0 /-361.0 /-514.0 / -515.0 /							
	20	5.030-931.0	Moulded part	1.000	ST	0000000000	0000000000
X-X	21	6.622-166.0	Ignition transformer 230V	1.000	ST	0000000000	0000000000
Position text: / 1.027-316.0 / -324.0 / -514.0/ -515.0							
X-X	21	2.883-791.0	Spare parts set ignition transformer	1.000	ST	0000000000	0000000000
Position text: / 1.027-315.0 / -318.0 / -322.0 / -323.0 / -328.0 / -329.0 / -360.0 /-361.0 /-503.0							
	21	6.622-167.0	Ignition transformer 230V	1.000	ST		
Position text: 1.027-317.0							
	22	5.115-921.0	Washer	1.000	ST	0000000000	0000000000
Position text: / 1.027-316.0 /-317.0 /-324.0 /-361.0 /-514.0 /-515.0							
X-X	22	5.115-255.0	Washer	1.000	ST	0000000000	0000000000
Position text: / 1.027-315.0 / -318.0 / -322.0 / -323.0 / -328.0 / -329.0 / -360.0 /-503.0							
X-X	23	6.647-250.0	Cable with rubber bushing	1.000	ST	0000000000	0000000000
Position text: / 1.027-315.0 / -318.0 / -322.0 / -323.0 / -328.0 / -329.0 / -360.0 /-503.0							
	23	6.647-564.0	Cable with rubber bushing	1.000	ST	0000000000	0000000000
Position text: / 1.027-514.0 / -515.0							

62 Bottom part (0.126-014.0)

ET/VT (spare/wear parts)	Pos	Material #	Name	Qty.	Unit	from ser.nr.	up to ser.nr.
	23	6.648-514.0	Cable complete .4X2,5	1.000	ST	0000000000	0000000000
Position text: / 1.027-316.0 / -317.0 / -324.0 / -361.0							
	24	6.646-356.0	Plug CEE-32A	1.000	ST	0000000000	0000000000
Position text: / 1.027-316.0 / -317.0 / -324.0 /							
	24	6.646-266.0	Coupler plug	1.000	ST	0000000000	0000000000
Position text: / 1.027-315.0 / -322.0 / -323.0 / -328.0/ -360.0 /-503.0 /							
	25	5.802-300.0	Mounting part	1.000	ST	0000000000	0000000000
Position text: / 1.027-361.0 /-514.0 /-515.0							
X-X	26	6.686-352.0	Temperature limiter	1.000	ST	0000000000	0000000000
	27	5.365-109.0	Profile gasket	1.000	ST	0000000000	0000000000

21 Spare parts set ignition transformer (2.883-791.0)

ET/VT (spare/wear parts)	Pos	Material #	Name	Qty.	Unit
X-X	10	4.821-071.0	IGNITION LEAD (HDS 557CI)	1.000	ST
	20	6.622-157.0	Ignition transformer 400V 50Hz	1.000	ST
X-X	30	6.647-518.0	Ignition cable	1.000	ST

70 Flow heater (0.131-003.0)

Pos	Material #	Name	Qty.	Unit	from ser.nr.	up to ser.nr.
71	0.131-051.0	Burner cover	1.000	ST	0000000000	0000000000
72	0.131-009.0	Heating coil	1.000	ST	0000000000	0000000000
73	0.131-057.0	Burner bottom	1.000	ST	0000000000	0000000000

71 Burner cover (0.131-051.0)

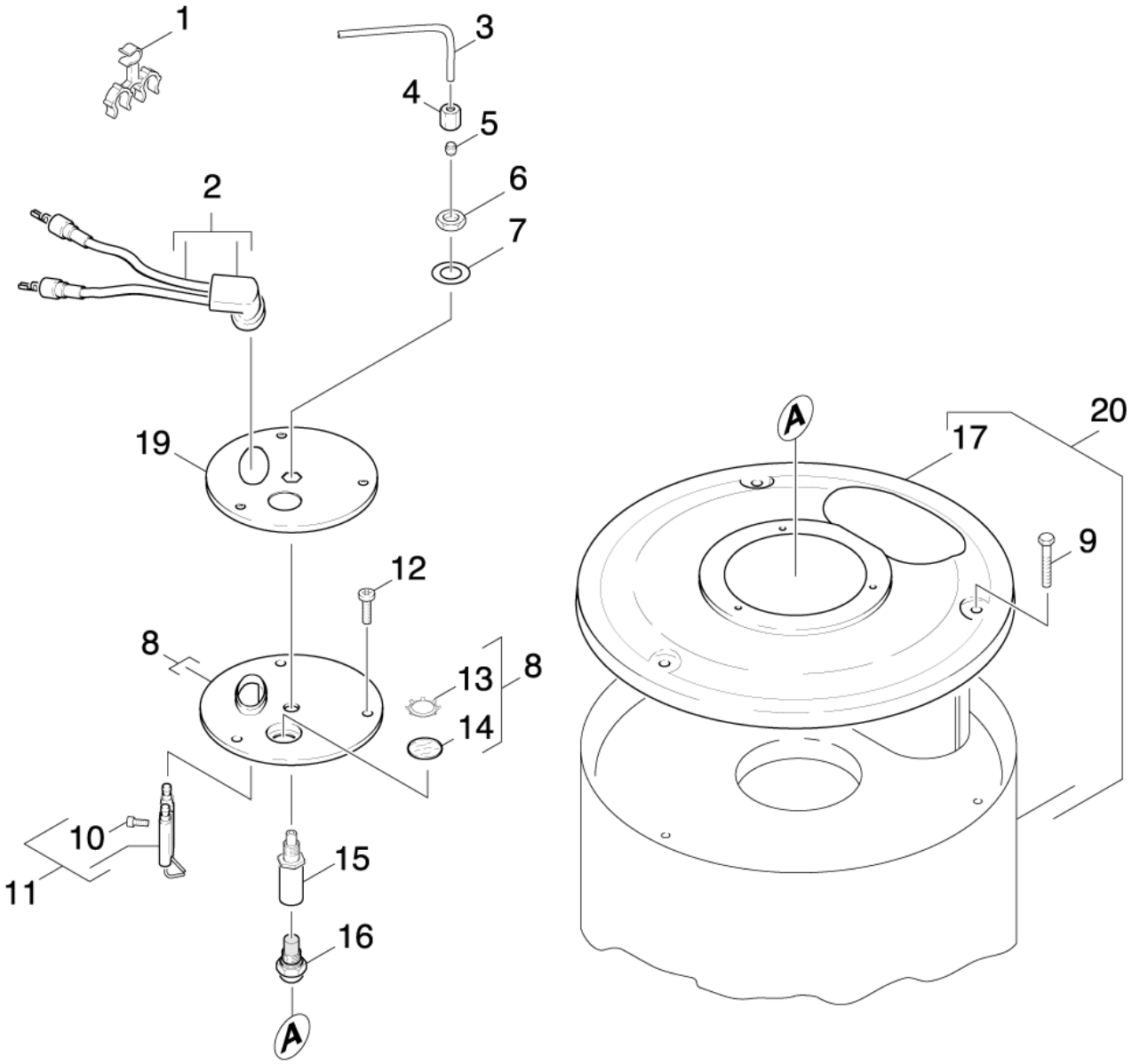

71 Burner cover (0.131-051.0)

ET/VT (spare/wear parts)	Pos	Material #	Name	Qty.	Unit	from ser.nr.	up to ser.nr.
	1	6.647-527.0	Holder	1.000	ST	0000000000	0000000000
X-X	2	4.821-071.0	IGNITION LEAD (HDS 557CI)	1.000	ST	0000000000	0000000000
X-X	3	5.423-187.0	Conduit fuel	1.000	ST	0000000000	0000000000
X-X	4	6.389-262.0	Union nut A 4-LL	1.000	ST	0000000000	0000000000
X-X	5	6.389-263.0	Cutting ring d.4	1.000	ST	0000000000	0000000000
	6	7.311-101.0	Hexagon nut M10x1 -04-A2E ISO 8675	1.000	ST	0000000000	0000000000
	7	7.312-302.0	Spring washer B10-FST-A2E DIN 137	1.000	ST	0000000000	0000000000
X-X	8	4.654-218.0	Cover pressure boiler	1.000	ST	0000000000	0000000000
	9	6.303-258.0	Self-tapping screw	3.000	ST	0000000000	0000000000
	10	7.306-217.0	Screw M5x14 -8.8-R2R (In6Rd)	1.000	ST	0000000000	0000000000
X-X	11	2.638-974.0	Conversion kit ignition electrode	1.000	ST	0000000000	0000000000
X-X	12	7.303-038.0	Screw M5x12 -St-P2R (In6Rd)	3.000	ST	0000000000	0000000000
X	13	6.343-165.0	Serrated ring	1.000	ST	0000000000	0000000000
X-X	14	6.278-018.0	Glass pane	1.000	ST	0000000000	0000000000
X-X	15	5.667-055.0	Nozzle holder	1.000	ST	0000000000	0000000000
X-X	16	6.415-682.0	Nozzle 1,35GPH	1.000	ST		
Position text: 1.027-360.0 /-361.0							
X-X	16	6.415-641.0	Nozzle	1.000	ST	0000000000	0000000000
Position text: / 1.027-315.0 / -316.0 / -317.0 /-318.0 /-322.0 /-323.0 /-324.0 /-328.0 /-329.0 /-503.0							
X-X	16	6.415-697.0	Burner nozzle 2,0GPH	1.000	ST	0000000000	0000000000
Position text: / 1.027-514.0 / -515.0							
	17	5.654-066.0	Cover pressure boiler	1.000	ST	0000000000	0000000000
X	19	5.654-059.0	Cover pressure boiler	1.000	ST	0000000000	0000000000
	20	4.652-131.0	Outer covering	1.000	ST	0000000000	0000000000

72 Heating coil (0.131-009.0)

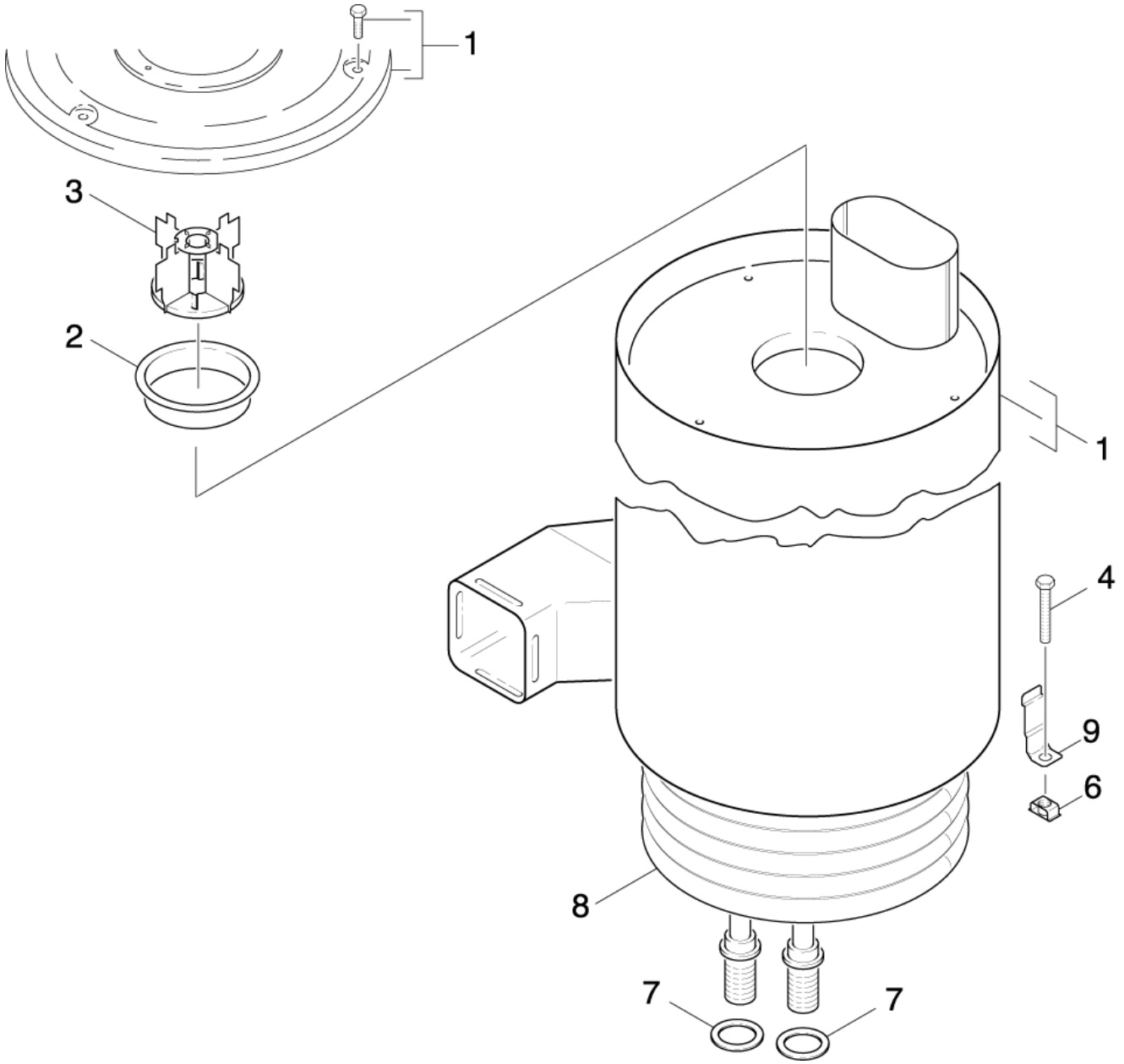

72 Heating coil (0.131-009.0)

ET/VT (spare/wear parts)	Pos	Material #	Name	Qty.	Unit	from ser.nr.	up to ser.nr.	Footnote text
	1	4.652-131.0	Outer covering	1.000	ST	0000000000	0000000000	
	2	5.664-207.0	Burner part	1.000	ST			
Position text: 1.027-360.0								
	2	5.664-195.0	Burner part	1.000	ST	0000000000	0000000000	
	3	4.663-088.0	Burner cage	1.000	ST	0000000000	0000000000	
X-X	4	7.304-051.0	Hexagonal head screw M 8x16-8.8-P2R EN	3.000	ST	0000000000	0000000000	
X-X	6	6.310-081.0	Cage nut M 8	3.000	ST	0000000000	0000000000	
X-X	7	5.365-068.0	Profile gasket	2.000	ST	0000000000	0000000000	
	8	4.680-137.0	Heating coil VA	1.000	ST	0000000000	0000000000	STAINLESS STEEL CONSTRUCTION
Position text: / 1.027-315.0 /-316.0 /317.0 /-318.0 / /-322.0 /-323.0 /-325.0 /-328.0 /-361.0 /-503.0								
X-X	8	4.680-135.0	Heating coil	1.000	ST	0000000000	0000000000	
Position text: / 1.027-315.0 / -316.0 / -317.0 /-318.0 / -323.0 / -324.0 / -325.0 / -328.0 /-360.0 /-361.0 /-503.0								
	8	4.680-114.0	Heating coil VA	1.000	ST	0000000000	0000000000	
Position text: / 1.027-329.0 / -514.0 / -515.0								
X-X	9	5.044-420.0	Holder	3.000	ST	0000000000	0000000000	

73 Burner bottom (0.131-057.0)

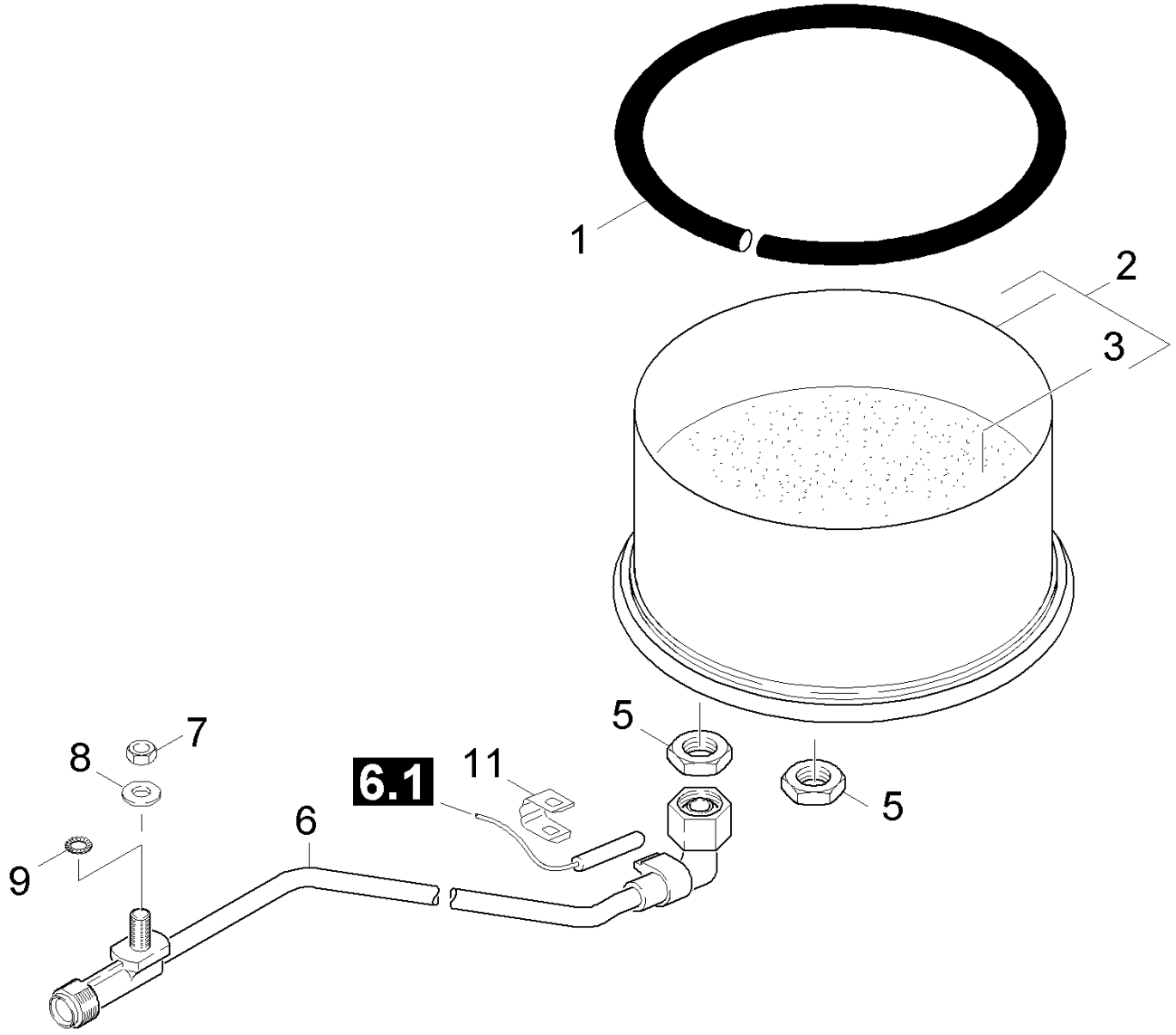

73 Burner bottom (0.131-057.0)

ET/VT (spare/wear parts)	Pos	Material #	Name	Qty.	Unit	from ser.nr.	up to ser.nr.
X-X	1	6.366-009.0	Seal string	1.000	ST	0000000000	0000000000
X-X	2	4.655-044.0	Bottom pressure boiler	1.000	ST	0000000000	0000000000
	3	2.889-061.0	Refractory material 8kg	1.000	ST	0000000000	0000000000
X-X	5	7.311-112.0	Hexagon nut M22X1,5 -22H-A2E DIN 936	2.000	ST	0000000000	0000000000
Position text: / 1.027-315.0 / -316.0 / -317.0 /-318.0 /-322.0 /-323.0 /-324.0 /-328.0 /-329.0 /-360.0 /-361.0 /-503.0							
X-X	5	7.311-155.0	Hexagon nut M22x1,5 -Cu2 DIN 936	2.000	ST	0000000000	0000000000
Position text: / 1.027-514.0 / -515.0							
X-X	6	4.421-627.0	Pipelines outlet	1.000	ST	0000000000	0000000000
Position text: / 1.027-315.0 / -316.0 / -318.0 / -322.0 / -323.0 / -324.0 / -325.0 /-329.0 /-360.0 /-503.0 /-514.0 /-515.0							
	6	4.421-645.0	Pipelines outlet	1.000	ST		
Position text: / 1.027-317.0 /-328.0 /-361.0							
X	7	7.311-511.0	Hexagon nut M10-8-A2E ISO 7040	1.000	ST	0000000000	0000000000
X	8	7.312-285.0	Washer 10 -200HV-A2E ISO7093-1	1.000	ST	0000000000	0000000000
	9	7.312-160.0	Toothed lock washer A10,5 -FSt-A3E DIN	1.000	ST	0000000000	0000000000
X-X	11	5.263-064.0	Tensioning part	1.000	ST	0000000000	0000000000

80 Float chest (0.136-009.0)

Pos	Material #	Name	Qty.	Unit	from ser.nr.	up to ser.nr.
81	0.136-003.0	Float chest	1.000	ST	0000000000	0000000000
82	0.136-010.0	DGT	1.000	ST	0000000000	0000000000

81 Float chest (0.136-003.0)

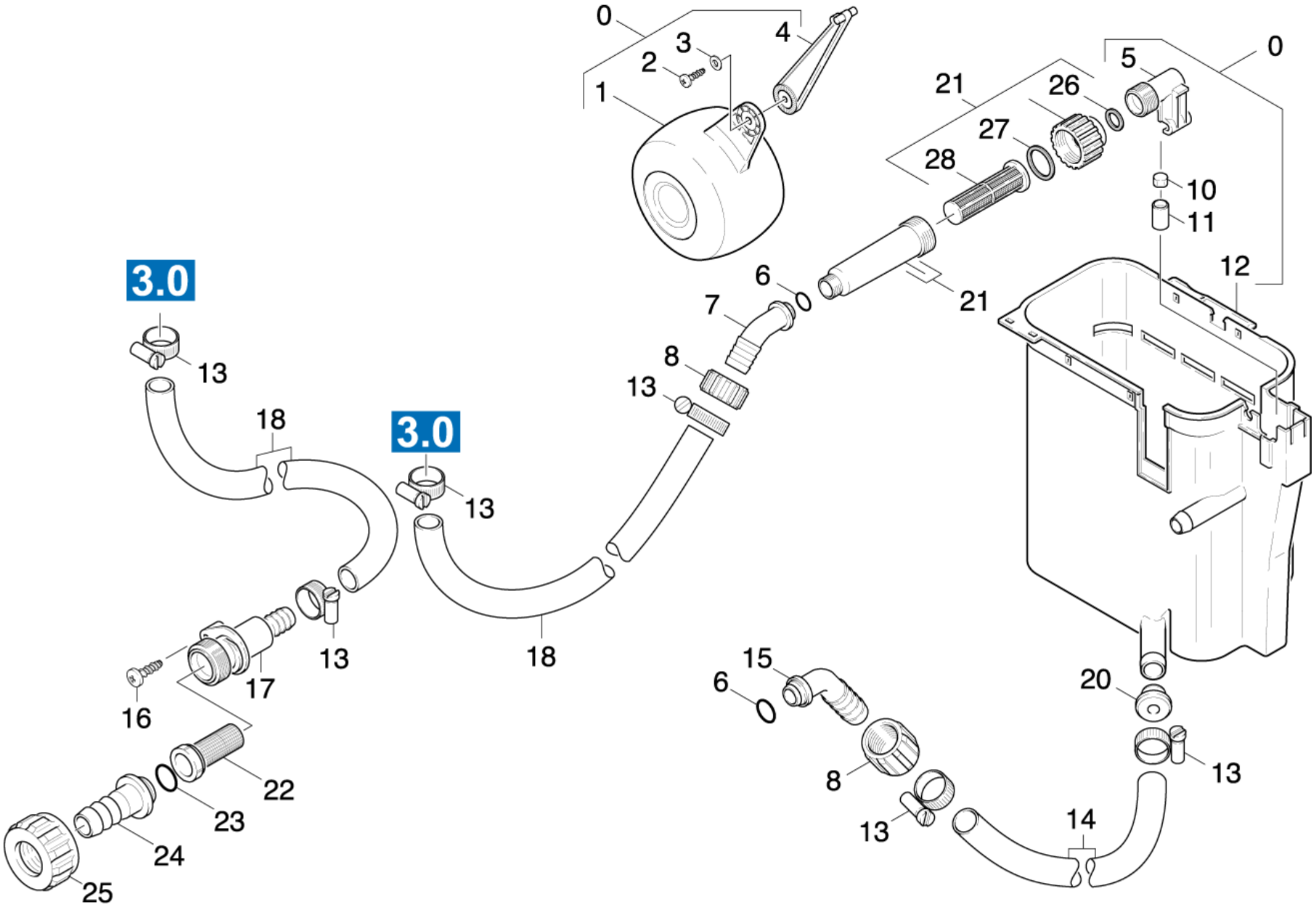

81 Float chest (0.136-003.0)

ET/VT (spare/wear parts)	Pos	Material #	Name	Qty.	Unit	from ser.nr.	up to ser.nr.	Footnote text
X	0	3.593-082.0	Float valve	1.000	ST	0000000000	0000000000	
	0	3.593-108.0	Float valve only for replacement	1.000	ST	0000000000	0000000000	
Position text: / 1.027-318.0								
X-X	1	5.585-004.0	Float	1.000	ST	0000000000	0000000000	
X-X	2	7.303-104.0	Screw 5x16 -A2-70 (IN6RD)	1.000	ST	0000000000	0000000000	
X-X	3	7.312-282.0	Washer 5 -A2 ISO 7093-1	1.000	ST	0000000000	0000000000	
X	4	5.481-118.0	Lever	1.000	ST	0000000000	0000000000	
X-X	5	5.587-147.0	Valve housing	1.000	ST	0000000000	0000000000	
X-X	6	6.362-078.0	O-Ring seal 13,3x2,4	2.000	ST	0000000000	0000000000	
X-X	7	5.443-285.0	Hose stem	1.000	ST	0000000000	0000000000	
X-X	8	5.310-062.0	Nut	2.000	ST	0000000000	0000000000	
X-X	10	5.364-095.0	Flat gasket	1.000	ST	0000000000	0000000000	
X-X	11	5.584-085.0	Valve pin	1.000	ST	0000000000	0000000000	
	12	5.070-140.0	Tank	1.000	ST	0000000000	0000000000	
Position text: / 1.027-318.0								
	12	5.070-140.0	Tank	1.000	ST	0000000000	0000000000	
X-X	13	7.373-022.0	Hose clip A-16-27x9 -W2-2 DIN3017	6.000	ST	0000000000	0000000000	
X-X	14	6.392-256.0	Piece of tube 19x4x430	1.000	ST	0000000000	0000000000	
X-X	15	5.443-211.0	Hose stem	1.000	ST	0000000000	0000000000	
X-X	16	7.303-112.0	Screw 6x20 -10.9-R2R (In6Rd)	1.000	ST	0000000000	0000000000	
X-X	17	5.427-154.0	Manifold	1.000	ST	0000000000	0000000000	
X-X	18	6.388-719.0	FLEX HOSE(CUT TO REQD LENGTH-M'S)	1.000	M	0000000000	0000000000	TO ORDER AS CUT GOODS
	20	5.112-286.0	Bush	1.000	ST	0000000000	0000000000	
X-X	21	4.730-127.0	Water filter	1.000	ST	0000000000	0000000000	
X-X	22	6.414-141.0	Strainer	1.000	ST	0000000000	0000000000	

81 Float chest (0.136-003.0)

ET/VT (spare/wear parts)	Pos	Material #	Name	Qty.	Unit	from ser.nr.	up to ser.nr.	Footnote text
X-X	23	6.362-161.0	O-Ring seal 19,3 X 2,4	1.000	ST	0000000000	0000000000	
X-X	24	5.443-291.0	Hose stem	1.000	ST	0000000000	0000000000	
X-X	25	5.310-076.0	Nut	1.000	ST	0000000000	0000000000	
	26	5.363-545.0	Seal	1.000	ST	0000000000	0000000000	
	27	5.363-336.0	Seal	1.000	ST	0000000000	0000000000	
X-X	28	5.731-587.0	Water filter	1.000	ST	0000000000	0000000000	

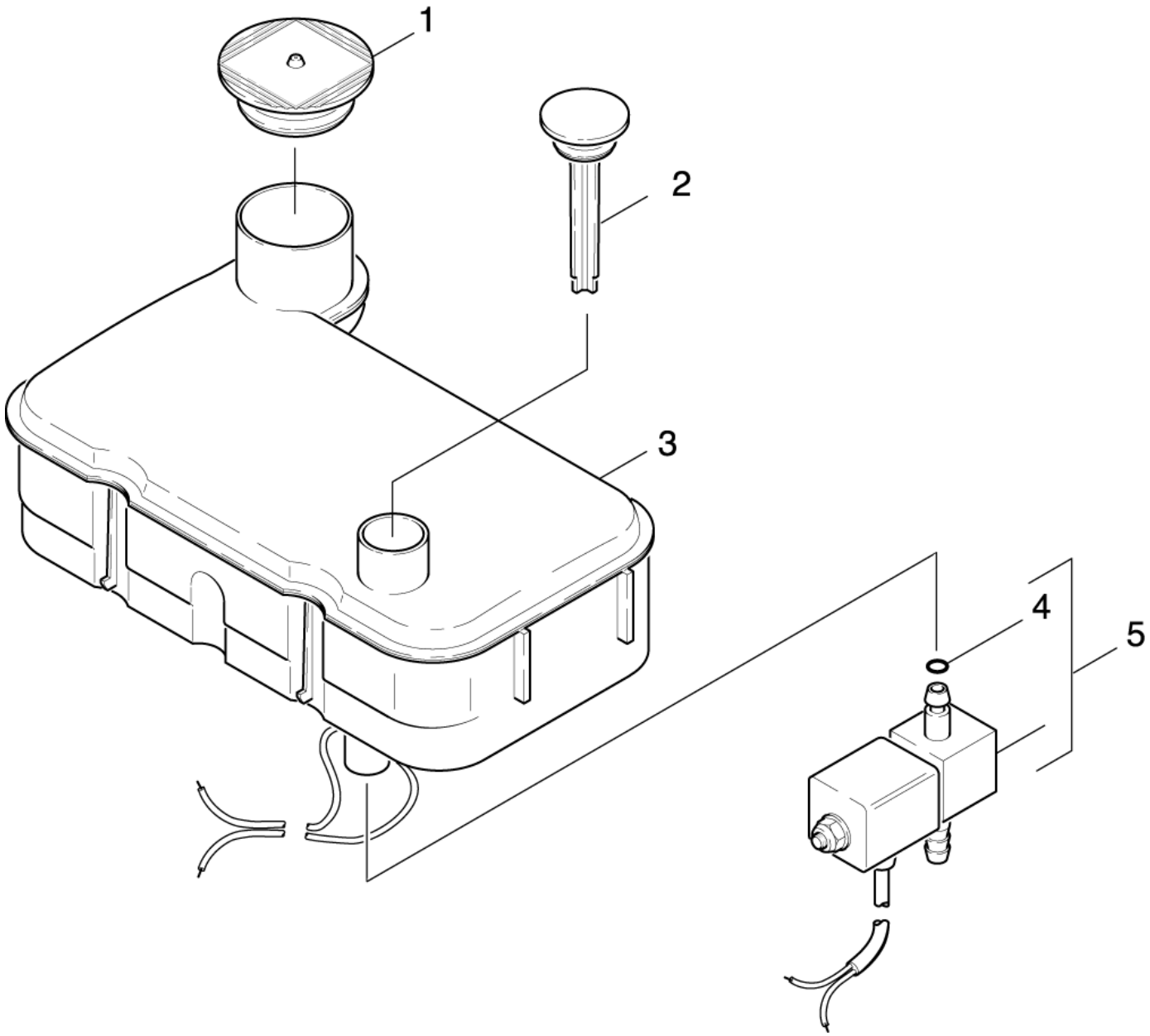
1
2
3
4
5

82 DGT (0.136-010.0)

ET/VT (spare/wear parts)	Pos	Material #	Name	Qty.	Unit	from ser.nr.	up to ser.nr.
X-X	1	5.063-487.0	Cover	1.000	ST	0000000000	0000000000
X-X	2	5.063-507.0	Cover	1.000	ST	0000000000	0000000000
X-X	3	4.070-188.0	WATER SOFTNER TANK	1.000	ST	0000000000	0000000000
X	4	6.362-113.0	O-Ring seal 6,0 x 2,0 NBR 70	1.000	ST	0000000000	0000000000
X-X	5	6.685-845.0	Solenoid valve	1.000	ST	0000000000	0000000000

90 Safety system (0.141-280.0)

Pos	Material #	Name	Qty.	Unit	from ser.nr.	up to ser.nr.	var. information
91	0.141-281.0	Safety system	1.000	ST	0000000000	0000000000	VERSION 1
92	0.141-282.0	Safety system	1.000	ST	0000000000	0000000000	VERSION 2

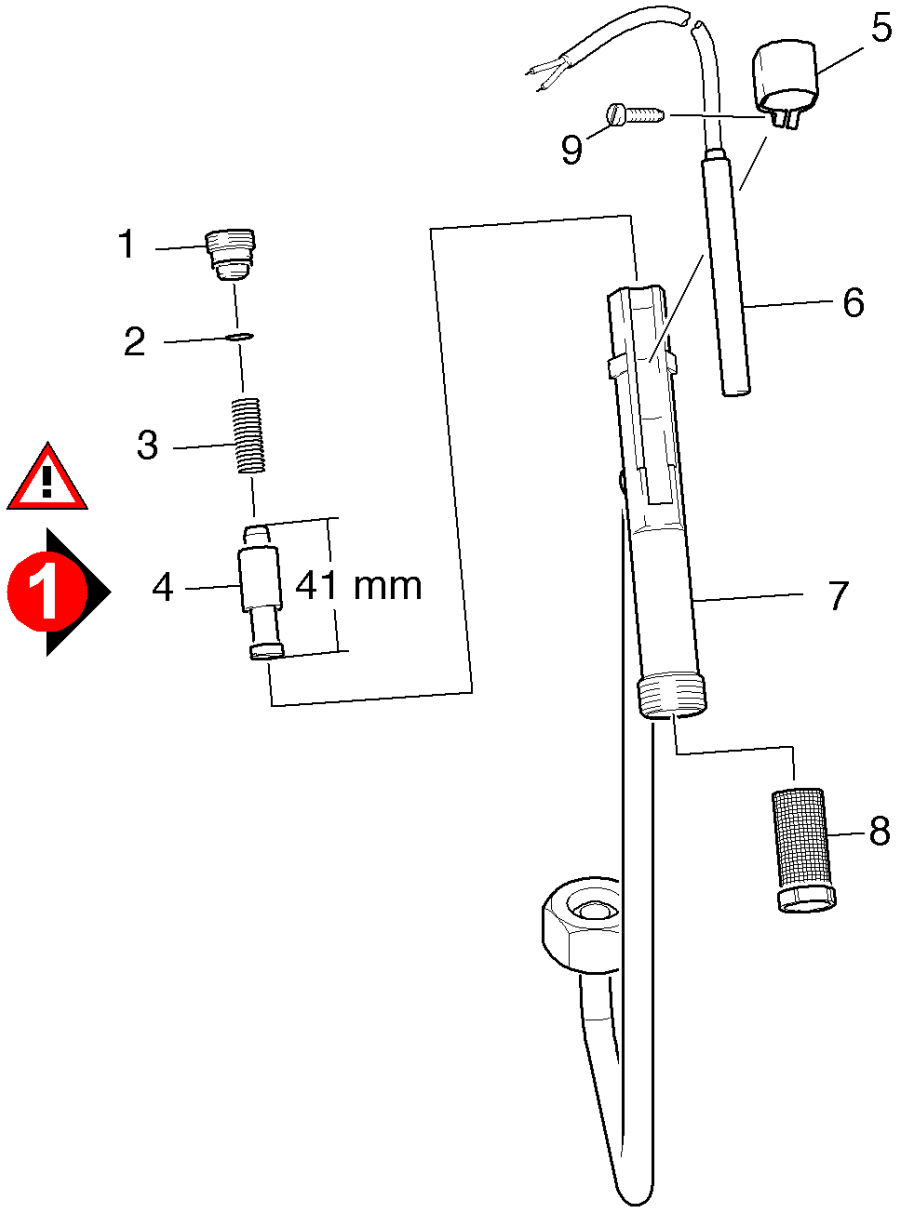
5
9
1
2
3
6
4
41 mm
7
8

91 Safety system (0.141-281.0)

ET/VT (spare/wear parts)	Pos	Material #	Name	Qty.	Unit	from ser.nr.	up to ser.nr.
X-X	1	5.305-162.0	Shaped screw	1.000	ST	0000000000	0000000000
X-X	2	6.362-482.0	O-Ring seal 10 x 1,5-NBR 70	1.000	ST	0000000000	0000000000
X-X	3	5.332-057.0	Helical spring	1.000	ST	0000000000	0000000000
X-X	4	4.553-022.0	Piston	1.000	ST	0000000000	0000000000
X-X	5	5.041-076.0	Clamp	1.000	ST	0000000000	0000000000
X-X	6	2.880-194.0	Reed switch replacement	1.000	ST	0000000000	0000000000
	7	4.427-202.0	Manifold	1.000	ST	0000000000	0000000000
X-X	8	6.414-566.0	Strainer WMS	1.000	ST	0000000000	0000000000
	9	6.303-122.0	M4 .2X13 DIN 7981 TORX T15 PAN HD HI/LO	1.000	ST	0000000000	0000000000

6 Reed switch replacement (2.880-194.0)

Pos	Material #	Name	Qty.	Unit
10	6.631-105.0	Reed switch	1.000	ST

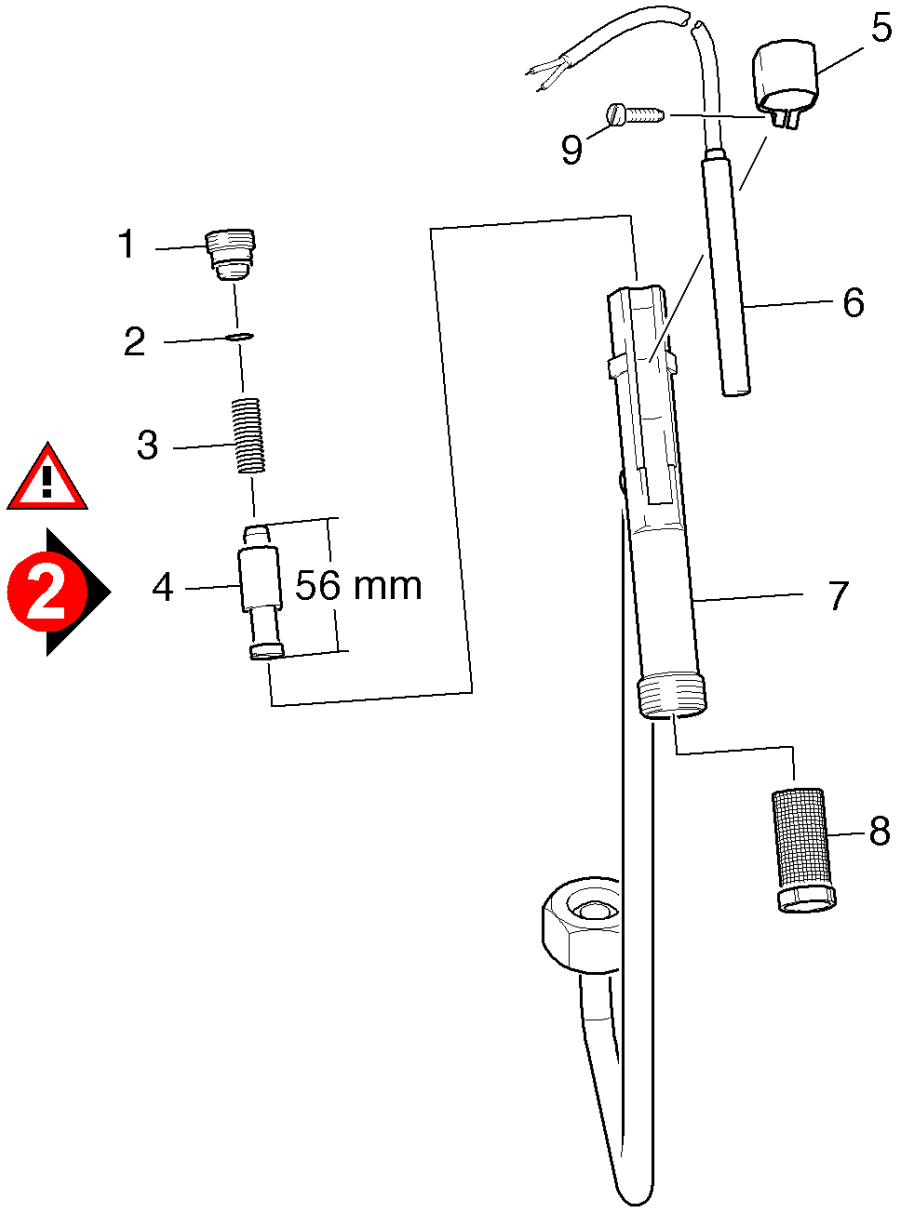
5
9
1
2
3
6
4
56 mm
7
8

92 Safety system (0.141-282.0)

ET/VT (spare/wear parts)	Pos	Material #	Name	Qty.	Unit	from ser.nr.	up to ser.nr.
X-X	1	5.305-162.0	Shaped screw	1.000	ST	0000000000	0000000000
X-X	2	6.362-482.0	O-Ring seal 10 x 1,5-NBR 70	1.000	ST	0000000000	0000000000
X-X	3	5.332-057.0	Helical spring	1.000	ST	0000000000	0000000000
X-X	4	4.551-058.0	Cartridge protection against water short	1.000	ST	0000000000	0000000000
X-X	5	5.041-076.0	Clamp	1.000	ST	0000000000	0000000000
X-X	6	2.880-194.0	Reed switch replacement	1.000	ST	0000000000	0000000000
X-X	7	4.427-335.0	Manifold	1.000	ST	0000000000	0000000000
X-X	8	6.414-566.0	Strainer WMS	1.000	ST	0000000000	0000000000
	9	6.303-122.0	M4 .2X13 DIN 7981 TORX T15 PAN HD HI/LO	1.000	ST	0000000000	0000000000

6 Reed switch replacement (2.880-194.0)

Pos	Material #	Name	Qty.	Unit
10	6.631-105.0	Reed switch	1.000	ST

100 Accessories (0.125-203.0)

Pos	Material #	Name	Qty.	Unit	from ser.nr.	up to ser.nr.
101	0.146-007.0	Hand trigger gun	1.000	ST	0000000000	0000000000
102	0.146-280.0	Hand trigger gun	1.000	ST	0000000000	0000000000
103	0.147-319.0	Jet pipe	1.000	ST	0000000000	0000000000
104	0.110-194.0	Steam nozzle	1.000	ST		
105	0.125-092.0	Hose reel	1.000	ST	0000000000	0000000000
106	0.148-805.0	Hose reel	1.000	ST	0000000000	0000000000

101 Hand trigger gun (0.146-007.0)

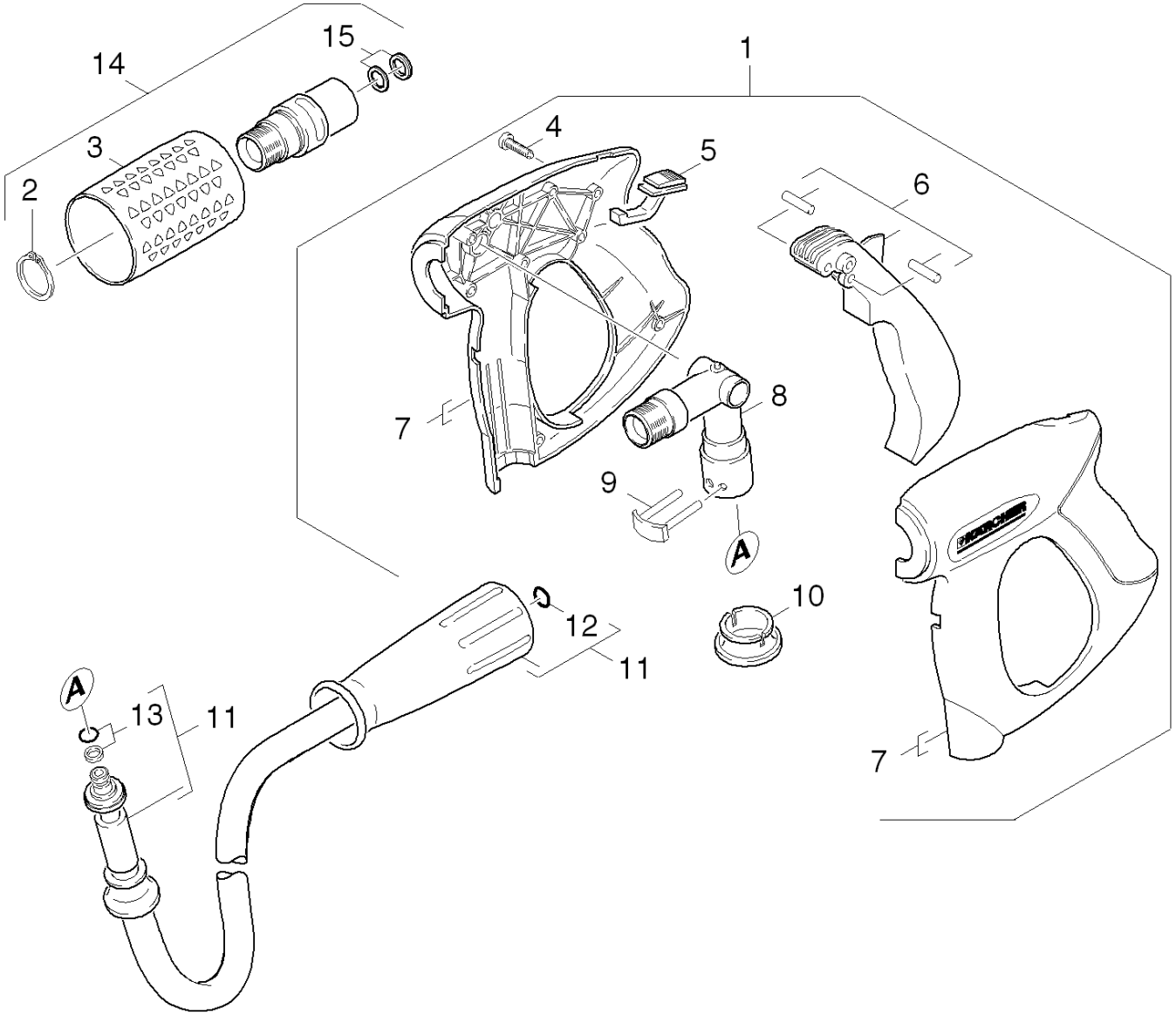

101 Hand trigger gun (0.146-007.0)

ET/VT (spare/wear parts)	Pos	Material #	Name	Qty.	Unit	from ser.nr.	up to ser.nr.
X-X	1	4.775-463.0	HAND TRIGGER GUN EASY PRESS	1.000	ST	0000000000	0000000000
Position text: 1.027-315.0 / -316.0 / -318.0 / -322.0 / -323.0 / -324.0 / -328.0 / -329.0 / -360.0 /-361.0 /-503.0							
X	2	7.343-069.0	Locking ring 25x1,2-1.4122 DIN 471	1.000	ST	0000000000	0000000000
	3	5.321-668.0	Handle	1.000	ST	0000000000	0000000000
	4	7.303-096.0	Screw 4x22 -ST-10.9-R2R (IN6RD)	7.000	ST	0000000000	0000000000
	5	5.481-331.0	Slider	1.000	ST	0000000000	0000000000
X	6	4.481-209.0	Lever complete	1.000	ST	0000000000	0000000000
X	7	5.321-669.0	Handhold few	1.000	ST	0000000000	0000000000
X-X	8	4.427-215.0	Manifold complete only for replacement	1.000	ST	0000000000	0000000000
X-X	9	4.037-013.0	Hook	1.000	ST	0000000000	0000000000
X-X	10	5.110-596.0	Sleeve	1.000	ST	0000000000	0000000000
X-X	11	6.390-208.0	Hose assembly DN8 40MPa 20m	1.000	ST	0000000000	0000000000
Position text: / 1.027-323.0 / -324.0 / -360.0							
X-X	11	6.391-351.0	Hose assembly only for replacement DN8 4	1.000	ST	0000000000	0000000000
Position text: / 1.027-315.0 /-316.0 /-318.0/-322.0 /-328.0 /-329.0 /-361.0 /-503.0							
X-X	12	2.880-296.0	Spare part set O-Ring seal 5x	1.000	ST	0000000000	0000000000
X-X	13	4.363-691.0	O-Ring seal kpl. -nur fuer Ersatz-	1.000	ST	0000000000	0000000000
X-X	14	4.775-470.0	Rotary controller 416L	1.000	ST	0000000000	0000000000
X-X	15	6.363-310.0	Grooved ring 14x9,4x2,6	1.000	ST		

12 Spare part set O-Ring seal 5x (2.880-296.0)

Pos	Material #	Name	Qty.	Unit
10	6.362-957.0	O-Ring seal 10,0 X 2,0-EPDM 85-90	5.000	ST

102 Hand trigger gun (0.146-280.0)

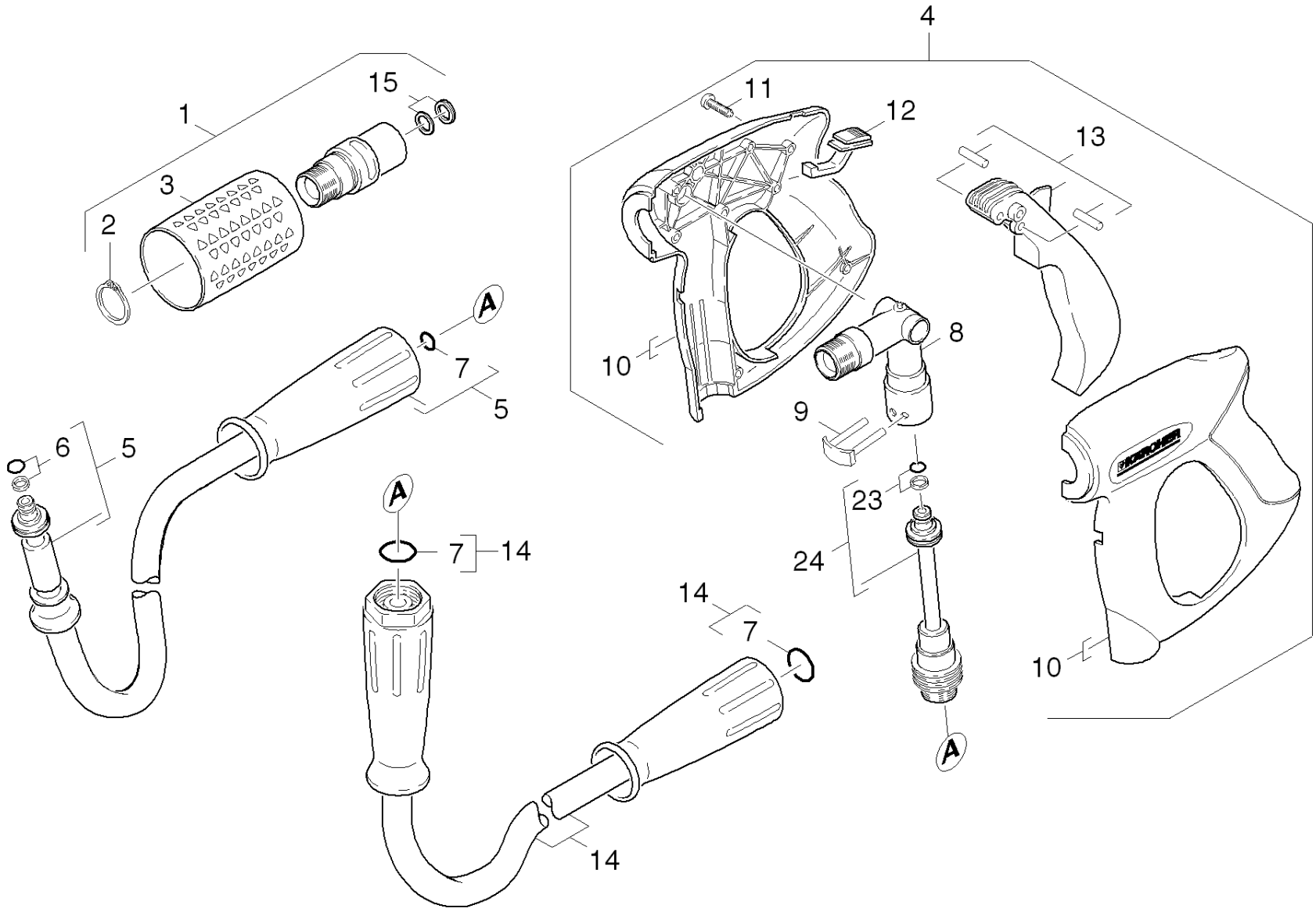

102 Hand trigger gun (0.146-280.0)

ET/VT (spare/wear parts)	Pos	Material #	Name	Qty.	Unit	from ser.nr.	up to ser.nr.	var. information
X-X	1	4.775-470.0	Rotary controller 416L	1.000	ST	0000000000	0000000000	
Position text: 1.027-317.0 /-325.0 /-514.0 /-515.0/								
X-X	2	7.343-008.0	Locking ring 25x1,2-St-vz DIN 471	1.000	ST	0000000000	0000000000	
	3	5.321-668.0	Handle	1.000	ST	0000000000	0000000000	
X-X	4	4.775-466.0	Hand trigger gun	1.000	ST	0000000000	0000000000	
Position text: 1.027-514.0 /-515.0 /-517.0 /-325.0								
X-X	5	6.390-208.0	Hose assembly DN8 40MPa 20m	1.000	ST	0000000000	0000000000	20 M
Position text: 1.027-325.0								
X-X	6	4.363-691.0	O-Ring seal kpl. -nur fuer Ersatz-	1.000	ST	0000000000	0000000000	
X-X	7	2.880-296.0	Spare part set O-Ring seal 5x	1.000	ST	0000000000	0000000000	
X-X	8	4.427-215.0	Manifold complete only for replacement	1.000	ST	0000000000	0000000000	
X-X	9	4.037-013.0	Hook	1.000	ST	0000000000	0000000000	
X	10	5.321-669.0	Handhold few	1.000	ST	0000000000	0000000000	
	11	7.303-096.0	Screw 4x22 -ST-10.9-R2R (IN6RD)	7.000	ST	0000000000	0000000000	
	12	5.481-331.0	Slider	1.000	ST	0000000000	0000000000	
X	13	4.481-209.0	Lever complete	1.000	ST	0000000000	0000000000	
X-X	14	6.391-354.0	Hose assembly only for replacement DN8 4	1.000	ST	0000000000	0000000000	10 M
Position text: 1.027-317.0 /-325.0 /-514.0 /-515.0 /								
X-X	15	6.363-310.0	Grooved ring 14x9,4x2,6	1.000	ST			
X-X	23	4.363-691.0	O-Ring seal kpl. -nur fuer Ersatz-	1.000	ST	0000000000	0000000000	
X-X	24	4.421-739.0	Adapter pipeline	1.000	ST	0000000000	0000000000	

7 Spare part set O-Ring seal 5x (2.880-296.0)

Pos	Material #	Name	Qty.	Unit
10	6.362-957.0	O-Ring seal 10,0 X 2,0-EPDM 85-90	5.000	ST

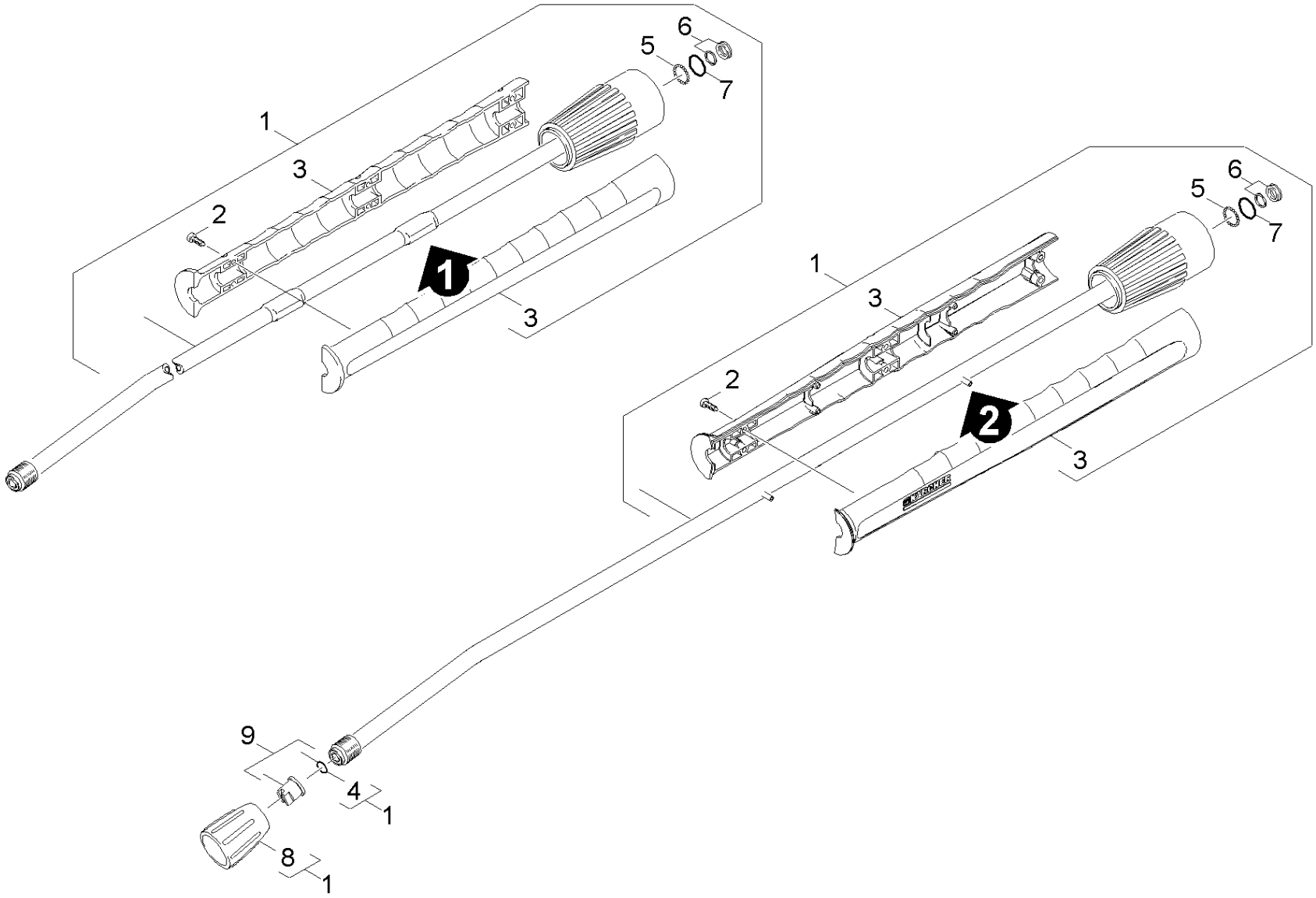
1
3
2
1
3
6
5
7
1
3
2
2
3
6
5
7
9
4
1
8
1

103 Jet pipe (0.147-319.0)

ET/VT (spare/wear parts)	Pos	Material #	Name	Qty.	Unit	from ser.nr.	up to ser.nr.	var. information
X-X	1	4.760-660.0	Jet pipe packaged only for replacement	1.000	ST	0000000000	0000000000	
X-X	2	7.303-129.0	Screw 4x16 -10.9-R2R (K-In6Rd)	6.000	ST	0000000000	0000000000	
	3	5.321-855.0	Handhold few jet pipe with welding bolt	1.000	ST			VERSION 2
	3	5.321-691.0	Handhold few jet pipe	1.000	ST	0000000000	0000000000	VERSION 1
X-X	4	2.880-296.0	Spare part set O-Ring seal 5x	1.000	ST	0000000000	0000000000	
X-X	5	7.401-915.0	Sphere 2,5 G20 -1.4034 DIN 5401	20.000	ST	0000000000	0000000000	
X-X	6	4.363-692.0	Grooved ring kpl. -nur fuer Ersatz-	1.000	ST	0000000000	0000000000	
X-X	7	6.362-524.0	O-Ring seal 17,0 X 1,5	1.000	ST	0000000000	0000000000	
X-X	8	5.401-129.0	Screw connector part	1.000	ST	0000000000	0000000000	
X-X	9	2.883-927.0	Power nozzle 25054	1.000	ST	0000000000	0000000000	
Position text: / 1.027-315.0 / -316.0 / -317.0 /-318.0 /-322.0 /-323.0 /-324.0 /-328.0 / -329.0 / -503.0								
X-X	9	2.883-402.0	Power nozzle 25060	1.000	ST	0000000000	0000000000	
Position text: / 1.027-514.0 / -515.0								
X-X	9	2.883-399.0	Power nozzle 25050	1.000	ST			
Position text: 1.027-360.0 /-361.0								

4 Spare part set O-Ring seal 5x (2.880-296.0)

Pos	Material #	Name	Qty.	Unit
10	6.362-957.0	O-Ring seal 10,0 X 2,0-EPDM 85-90	5.000	ST

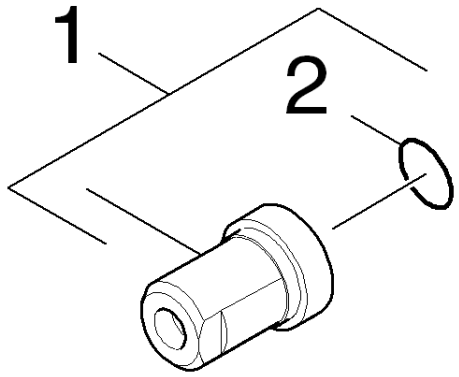
1
2

104 Steam nozzle (0.110-194.0)

ET/VT (spare/wear parts)	Pos	Material #	Name	Qty.	Unit
	1	2.885-041.0	Steam nozzle 40070	1.000	ST
Position text: 1.027-360.0 /-361.0					
	1	2.885-050.0	Steam nozzle only for replacement 40075	1.000	ST
Position text: 1.027-315.0 /-316.0 /-317.0 /-318.0 / -322.0 /-323.0 /-324.0 /-325.0 /-328.0 / -329.0 /-503.0					
X-X	2	7.362-501.0	O-Ring seal 10x2 EPDM 70 DIN 3770	1.000	ST

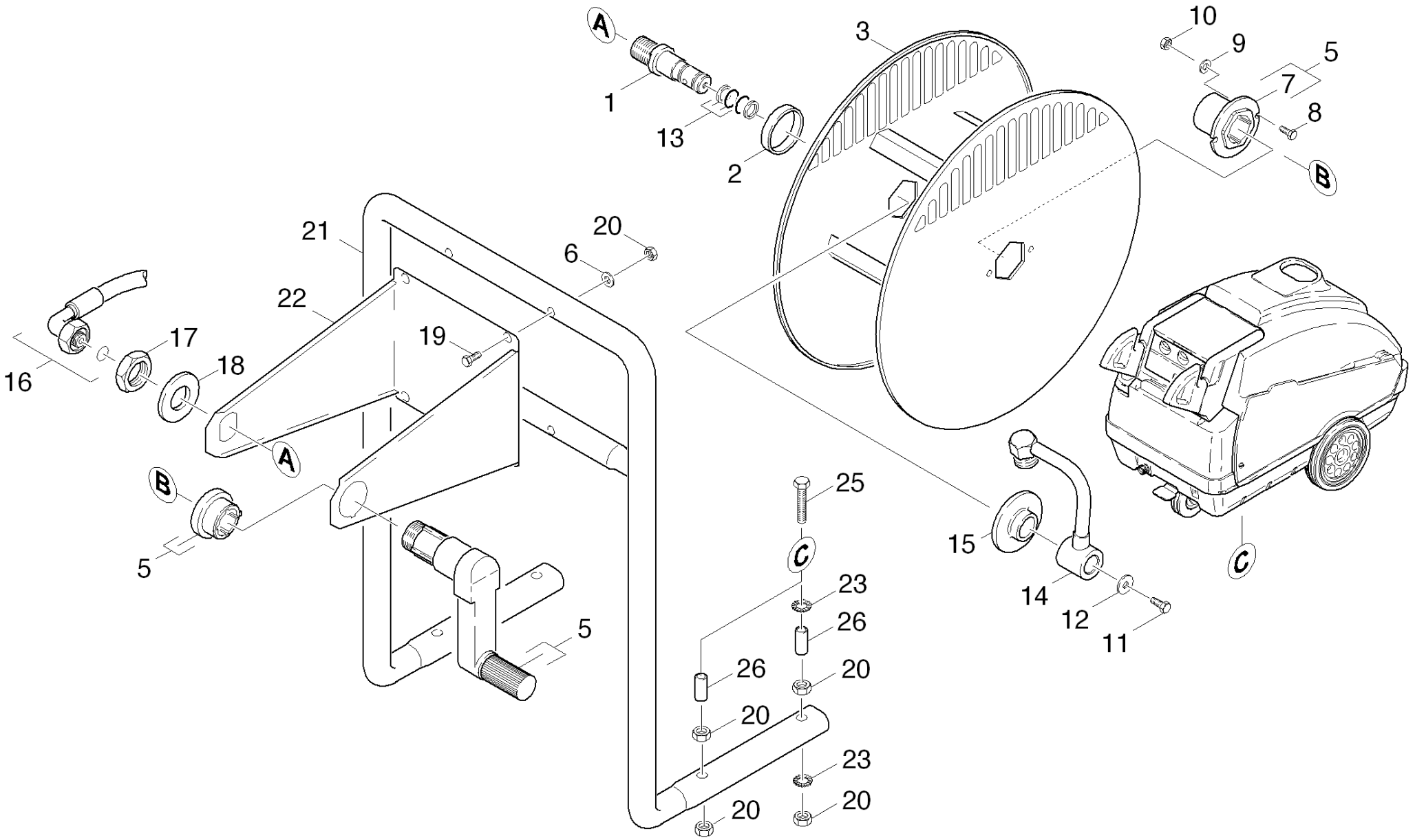
A
1
13
2
3
10
9
5
7
8
B
20
6
21
22
19
16
17
18
A
B
5
25
C
23
26
26
20
20
20
23
20
5
15
14
12
11
C

ET/VT (spare/wear parts)	Pos	Material #	Name	Qty.	Unit	from ser.nr.	up to ser.nr.
X-X	1	5.108-098.0	Pin	1.000	ST	0000000000	0000000000
Position text: / 1.027-323.0 / -360.0							
X	2	5.110-340.0	Sleeve	1.000	ST	0000000000	0000000000
Position text: / 1.027-323.0 / -360.0							
	3	4.204-504.0	Hose reel	1.000	ST	0000000000	0000000000
Position text: / 1.027-323.0 / -360.0							
X-X	5	2.884-318.0	Spare part set hose reel	1.000	ST	0000000000	0000000000
Position text: / 1.027-323.0 / -360.0							
X-X	6	7.312-004.0	Washer 8 -200HV-A3E ISO 7090	4.000	ST	0000000000	0000000000
Position text: / 1.027-323.0 / -360.0							
	7	5.112-304.0	Bush	1.000	ST	0000000000	0000000000
Position text: / 1.027-323.0 / -360.0							
	8	7.306-058.0	Screw M 4X 12- 8.8-R2R K-IN6RD	2.000	ST	0000000000	0000000000
Position text: / 1.027-323.0 / -360.0							
	9	7.312-001.0	Washer 4 -200HV-A3E ISO 7089	2.000	ST	0000000000	0000000000
Position text: / 1.027-323.0 / -360.0							
	10	7.311-001.0	Hexagon nut M4 -8-A2E ISO 4032	2.000	ST	0000000000	0000000000
Position text: / 1.027-323.0 / -360.0							
	11	7.306-190.0	Screw M6x8 -A2-70 (In6Rd)	1.000	ST	0000000000	0000000000
Position text: / 1.027-323.0 / -360.0							
X-X	12	7.312-260.0	Washer 6 -100HV-A3E ISO 7094	1.000	ST	0000000000	0000000000
Position text: / 1.027-323.0 / -360.0							
X-X	13	6.362-466.0	O-Ring seal complete 1ST.-R.	2.000	ST	0000000000	0000000000
Position text: / 1.027-323.0 / -360.0							
X	14	4.408-044.0	Tube elbow	1.000	ST	0000000000	0000000000
Position text: / 1.027-323.0 / -360.0							

ET/VT (spare/wear parts)	Pos	Material #	Name	Qty.	Unit	from ser.nr.	up to ser.nr.
X	15	5.112-305.0	Bush	1.000	ST	0000000000	0000000000
Position text: / 1.027-323.0 / -360.0							
X-X	16	6.390-123.0	Hose assembly DN8 40MPa 0,6m	1.000	ST	0000000000	0000000000
Position text: / 1.027-323.0 / -360.0							
X-X	17	7.311-155.0	Hexagon nut M22x1,5 -Cu2 DIN 936	1.000	ST	0000000000	0000000000
Position text: / 1.027-323.0 / -360.0							
	18	7.312-024.0	Washer 22-200HV-A3E ISO7090	1.000	ST	0000000000	0000000000
Position text: / 1.027-323.0 / -360.0							
X-X	19	7.306-044.0	Cylinder head screw M8x35 -8.8-A2E ISO4	4.000	ST	0000000000	0000000000
Position text: / 1.027-323.0 / -360.0							
X-X	20	7.311-004.0	Hexagon nut M8 -8-A3E ISO 4032	8.000	ST	0000000000	0000000000
Position text: / 1.027-323.0 / -360.0							
	21	4.044-034.0	Holder complete	1.000	ST	0000000000	0000000000
Position text: / 1.027-323.0 / -360.0							
	22	5.046-485.0	Sheet metal component	1.000	ST	0000000000	0000000000
Position text: / 1.027-323.0 / -360.0							
X-X	23	7.312-166.0	Toothed lock washer A8,4-FSt-A3E DIN 67	6.000	ST	0000000000	0000000000
Position text: / 1.027-323.0 / -360.0							
	25	7.304-401.0	Hexagonal head screw M 8x60-8.8-A2E ISO	4.000	ST	0000000000	0000000000
Position text: / 1.027-323.0 / -360.0							
X	26	5.110-778.0	Sleeve	4.000	ST	0000000000	0000000000
Position text: / 1.027-323.0 / -360.0							

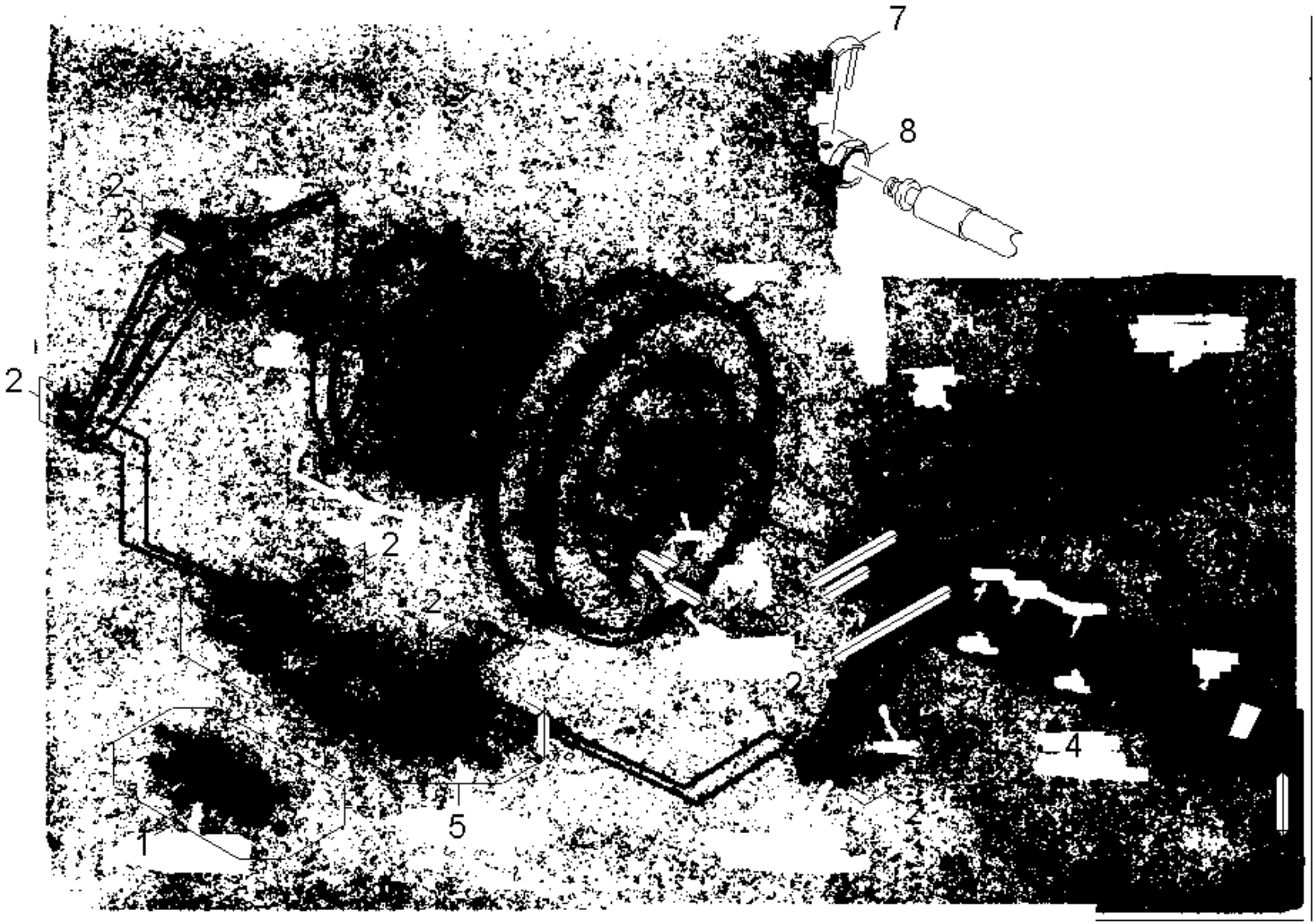
7
8
2
2
2
2
2
2
2
2
4
5
1

106 Hose reel (0.148-805.0)

ET/VT (spare/wear parts)	Pos	Material #	Name	Qty.	Unit	from ser.nr.	up to ser.nr.
	1	4.880-054.0	Spare part set hose stop	1.000	ST	0000000000	0000000000
Position text: 1.027-325.0							
	2	4.880-055.0	Spare part set screws	1.000	ST	0000000000	0000000000
Position text: 1.027-325.0							
	3	4.880-053.0	Spare part set notch	1.000	ST	0000000000	0000000000
Position text: 1.027-325.0							
	4	4.880-057.0	Spare part set hose reel VA	1.000	ST	0000000000	0000000000
Position text: 1.027-325.0							
	5	4.880-056.0	Spare part set holder rollers Stahl	1.000	ST	0000000000	0000000000
Position text: 1.027-325.0							
	6	5.409-542.0	Nipple	1.000	ST	0000000000	0000000000
Position text: 1.027-325.0							
X-X	7	4.037-013.0	Hook	1.000	ST	0000000000	0000000000
Position text: 1.027-325.0							
	8	5.409-541.0	Nipple	1.000	ST	0000000000	0000000000
Position text: 1.027-325.0							

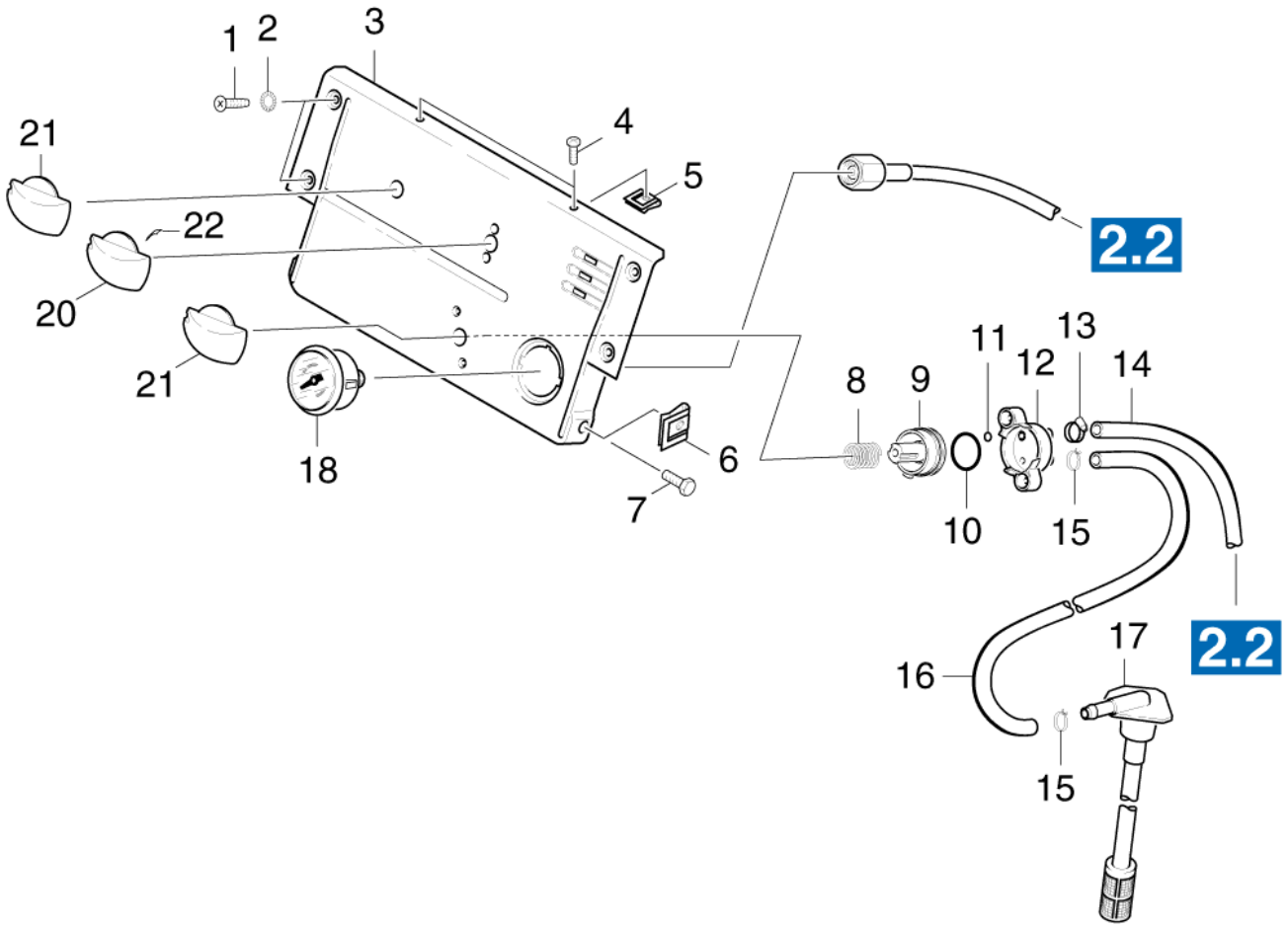
1
2
3
4
5
21
22
20
21
18
7
6
2.2
8
9
11
12
13
14
10
15
16
17
15
2.2

ET/VT (spare/wear parts)	Pos	Material #	Name	Qty.	Unit	from ser.nr.	up to ser.nr.	Footnote text
X-X	1	7.303-038.0	Screw M5x12 -St-P2R (In6Rd)	4.000	ST	0000000000	0000000000	
X	2	7.312-172.0	Toothed lock washer A5,3-FSt-A3E DIN 67	4.000	ST	0000000000	0000000000	
X-X	3	5.841-463.0	Control panel	1.000	ST	0000000000	0000000000	
	4	7.303-078.0	Sheet metal screw ST4,8X19-ST-A2R (KOMBI	2.000	ST	0000000000	0000000000	
	5	6.310-034.0	Speed nut	2.000	ST	0000000000	0000000000	
	6	6.310-082.0	Putting nut M6	2.000	ST	0000000000	0000000000	
X	7	7.304-382.0	Hexagonal head screw M 6x12-8.8-A2E ISO	2.000	ST	0000000000	0000000000	
X	8	5.332-474.0	Helical spring	1.000	ST	0000000000	0000000000	
X-X	9	5.581-251.0	Valve seat	1.000	ST	0000000000	0000000000	
X-X	10	6.362-712.0	O-Ring seal 25,3 X 2,4	1.000	ST	0000000000	0000000000	
X-X	11	6.362-386.0	O-Ring seal 5,0 x 1,5-NBR 80	1.000	ST	0000000000	0000000000	
X-X	12	5.587-054.0	Valve housing	1.000	ST	0000000000	0000000000	
X-X	13	6.388-515.0	Hose clip	1.000	ST	0000000000	0000000000	
X-X	14	6.388-194.0	Hose DN 7	1.000	M	0000000000	0000000000	TO ORDER AS CUT GOODS
X-X	15	6.388-559.0	Hose clip	2.000	ST	0000000000	0000000000	
X-X	16	6.388-225.0	Hose DN 7	1.000	M	0000000000	0000000000	TO ORDER AS CUT GOODS
X-X	17	6.414-028.0	Filter	1.000	ST	0000000000	0000000000	
	18	6.421-223.0	Pressure gauge 0-30 MPA	1.000	ST	0000000000	0000000000	
Position text: / 1.027-514.0 / -515.0								
X-X	18	6.421-170.0	Pressure gauge 0-315 BAR	1.000	ST	0000000000	0000000000	
Position text: / 1.027-315.0 / -316.0 / -317.0 /-318.0 /-322.0 /-323.0 /-324.0 /-328.0 /-329.0 /-360.0 /-361.0 /-503.0								
X-X	20	5.321-641.0	Handhold thermostat	1.000	ST	0000000000	0000000000	
X-X	21	5.321-633.0	Handhold	2.000	ST	0000000000	0000000000	
X-X	22	6.313-014.0	Spring element	1.000	ST	0000000000	0000000000	

Pos	Material #	Name	Qty.	Unit
201	0.120-002.0	Tool pressure gauge	1.000	ST
202	0.120-003.0	Tool valve pliers	1.000	ST
203	0.120-004.0	Tool stop cock	1.000	ST
204	0.120-008.0	Tool measuring instrument current AC/DC,	1.000	ST
205	0.120-009.0	Tool measuring instrument set HDS	1.000	ST
206	0.120-010.0	Tool temperature gauge stop cock HDS	1.000	ST
207	0.120-013.0	Tool valve seat excess-current	1.000	ST
208	0.120-012.0	Tool pressure gauge fuel HDS	1.000	ST
209	0.120-014.0	Tool valve seat excess-current	1.000	ST
210	0.120-031.0	Tool mandril grooved rings -Piston D20mm	1.000	ST
211	0.120-032.0	Tool sleeve grooved rings -Piston D20mm	1.000	ST
212	0.120-062.0	Tool internal puller D8-12mm	1.000	ST
213	0.120-060.0	Tool countersupport internal puller	1.000	ST
214	0.120-064.0	Tool internal puller D20-30mm	1.000	ST

201 Tool pressure gauge (0.120-002.0)

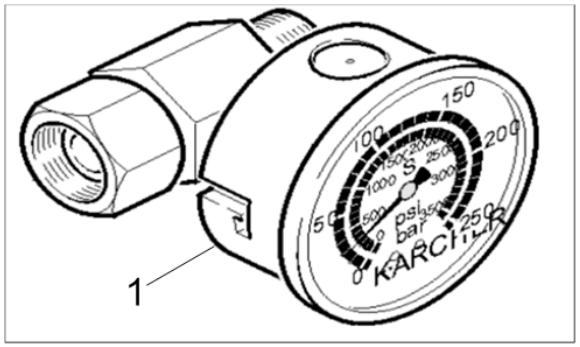

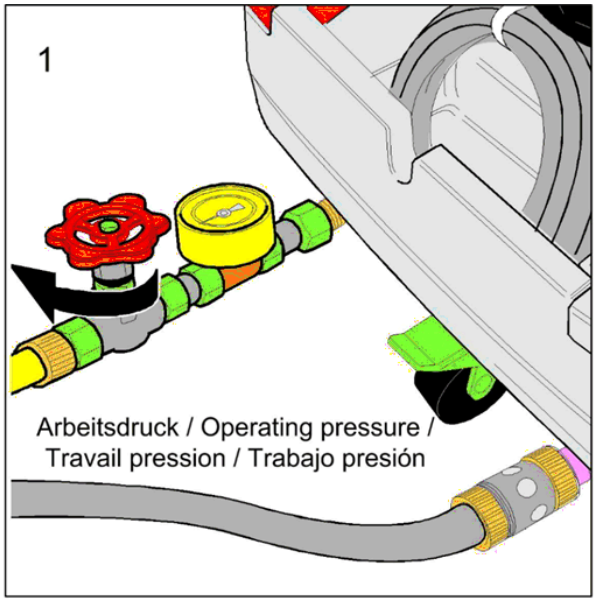

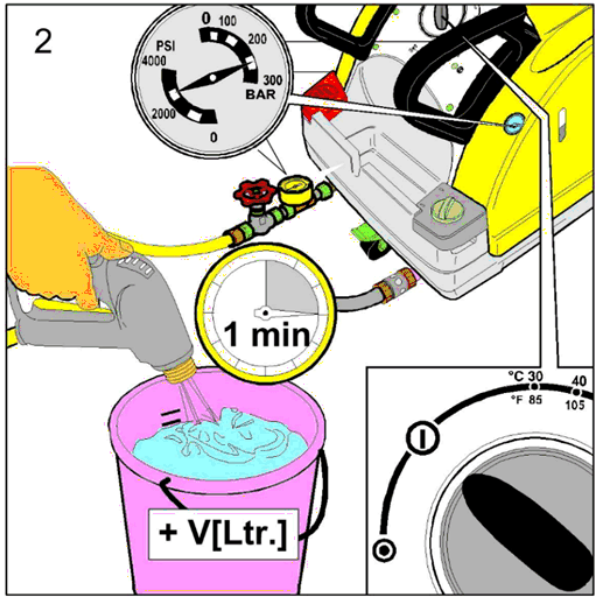

201 Tool pressure gauge (0.120-002.0)

Pos	Material #	Name	Qty.	Unit
1	4.742-025.0	Tool pressure gauge	1.000	ST

202 Tool valve pliers (0.120-003.0)

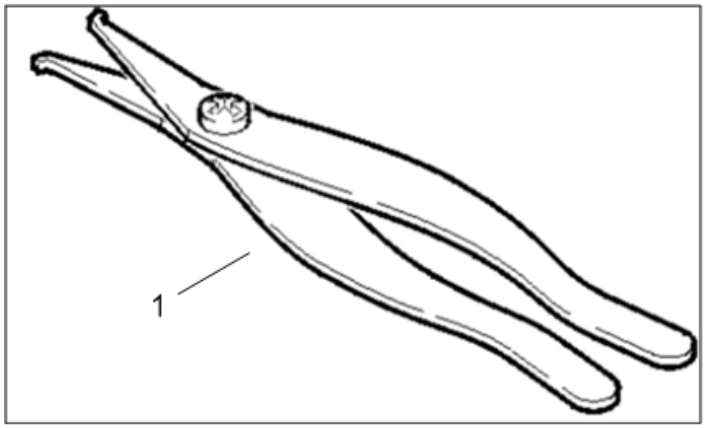

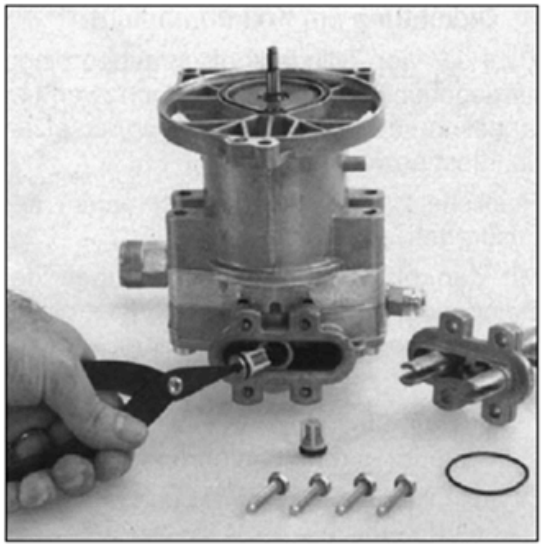

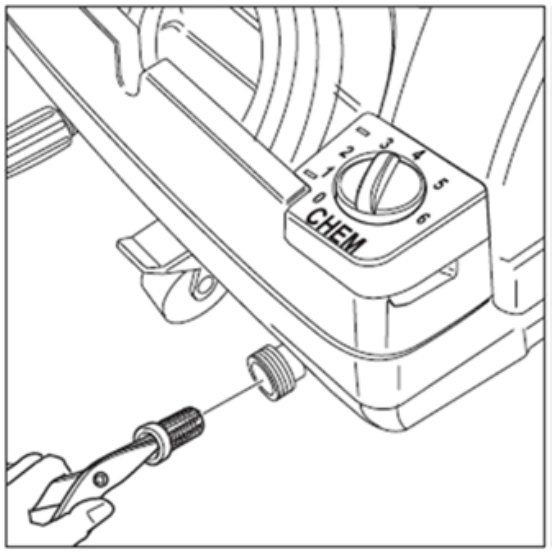

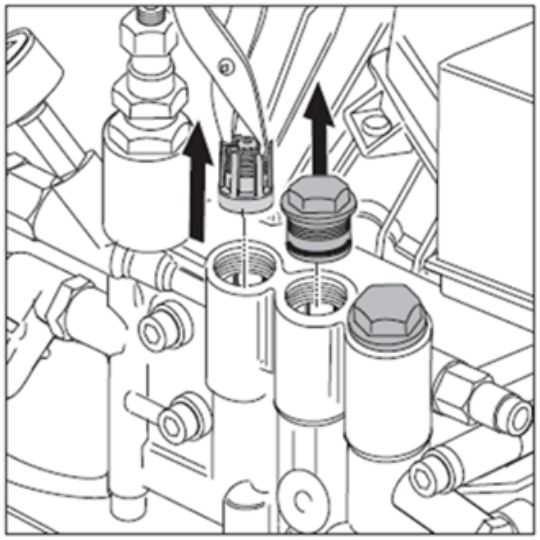

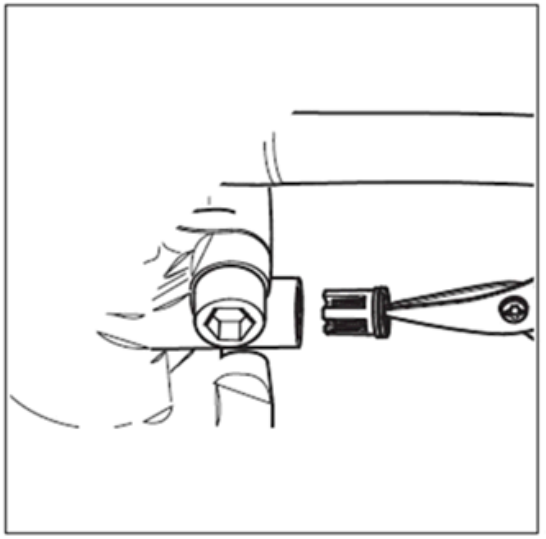

202 Tool valve pliers (0.120-003.0)

ET/VT (spare/wear parts)	Pos	Material #	Name	Qty.	Unit
X	1	4.901-062.0	Tool valve pliers	1.000	ST

203 Tool stop cock (0.120-004.0)

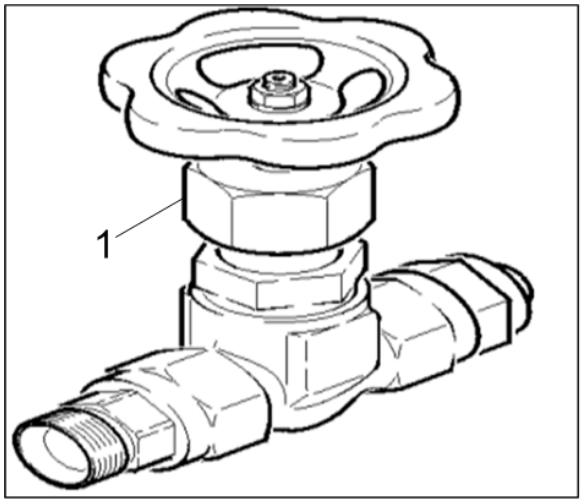

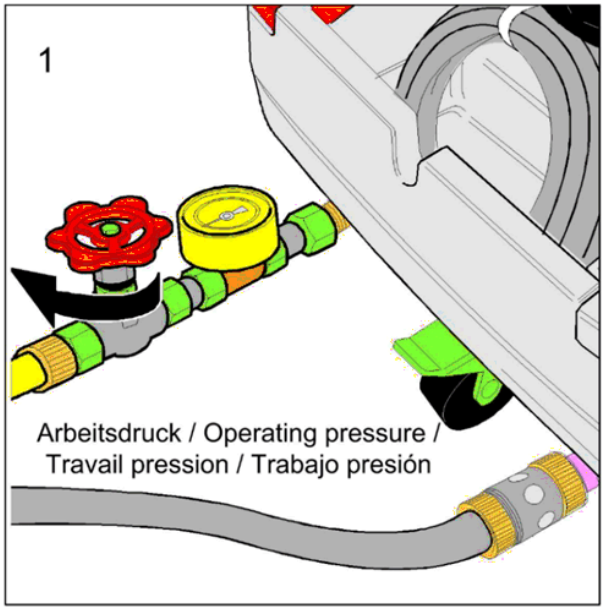

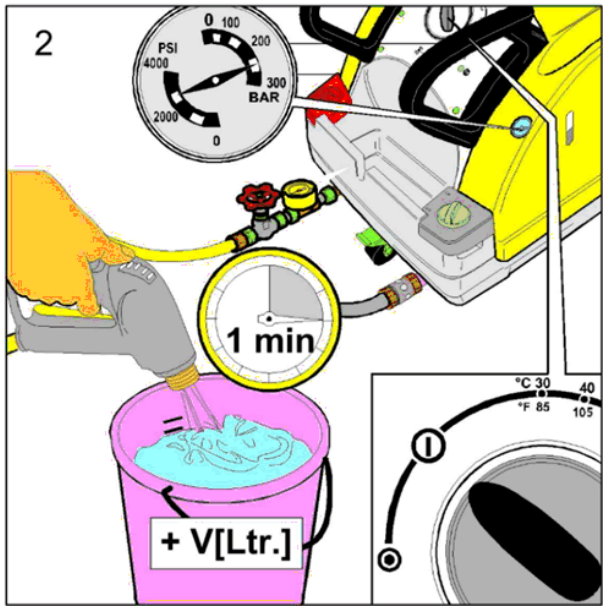

203 Tool stop cock (0.120-004.0)

Pos	Material #	Name	Qty.	Unit
1	4.580-034.0	Stop cock	1.000	ST

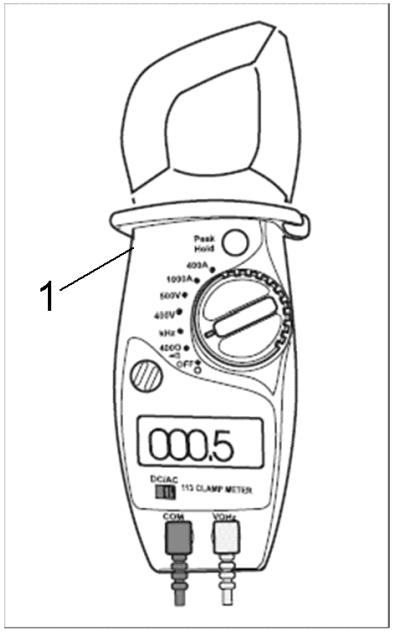

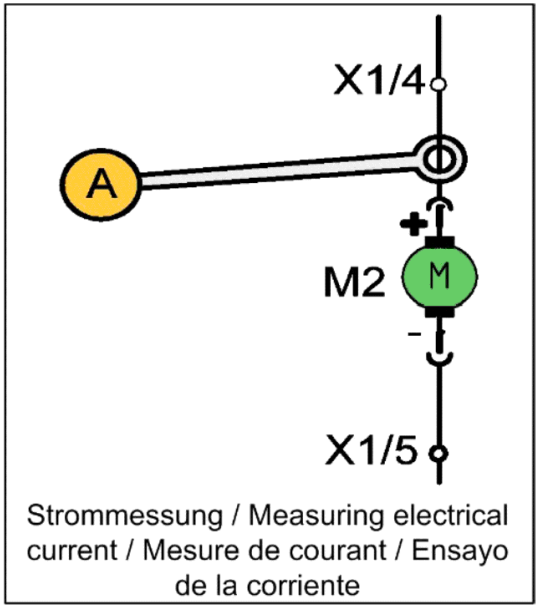

Strommessung / Measuring electrical current / Mesure de courant / Ensayo de la corriente

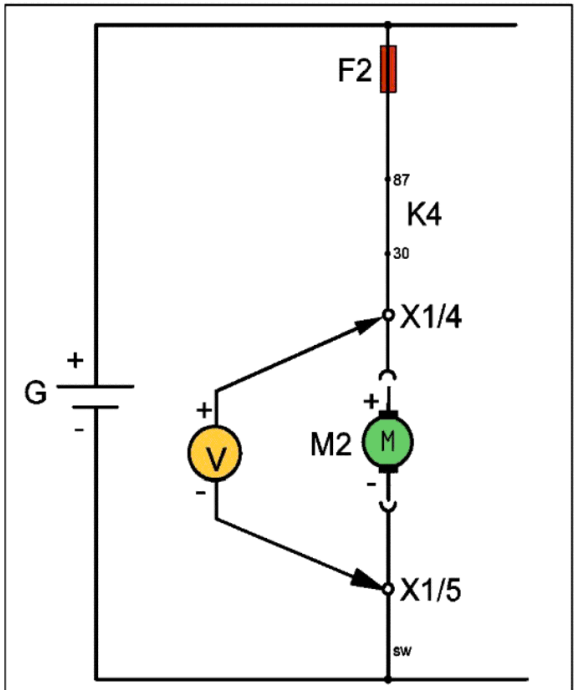

Spannungsmessung / Measuring voltage Mesure de voltage / Ensayo de la tension

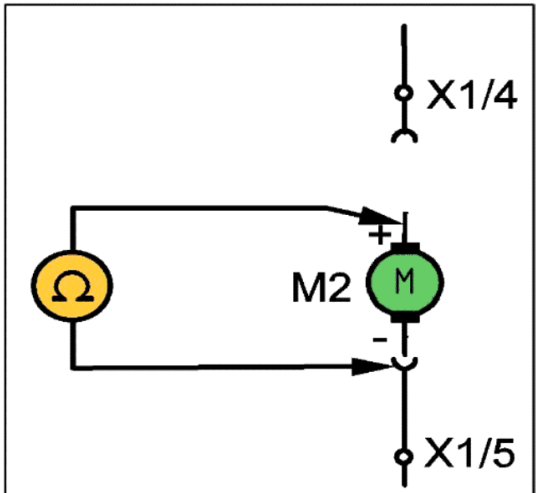

Widerstandsmessung / Measuring resistance / Mesure de résistance / Ensayo de la resisitividad

204 Tool measuring instrument current AC/DC, (0.120-008.0)

Pos	Material #	Name	Qty.	Unit
1	6.803-022.0	Tool measuring instrument current AC/DC,	1.000	ST

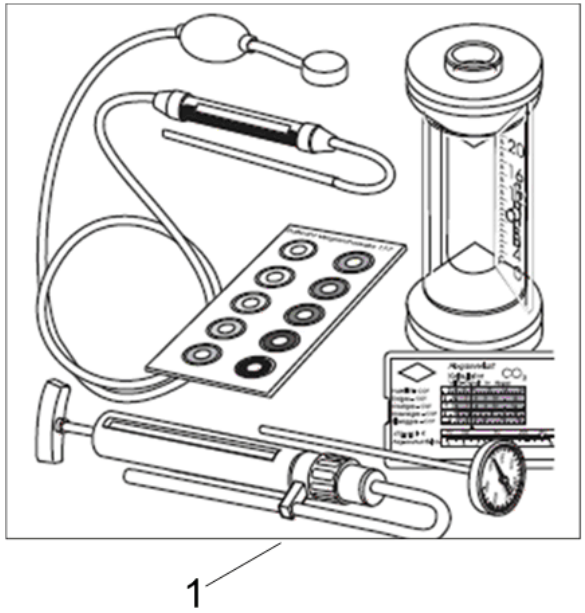
1

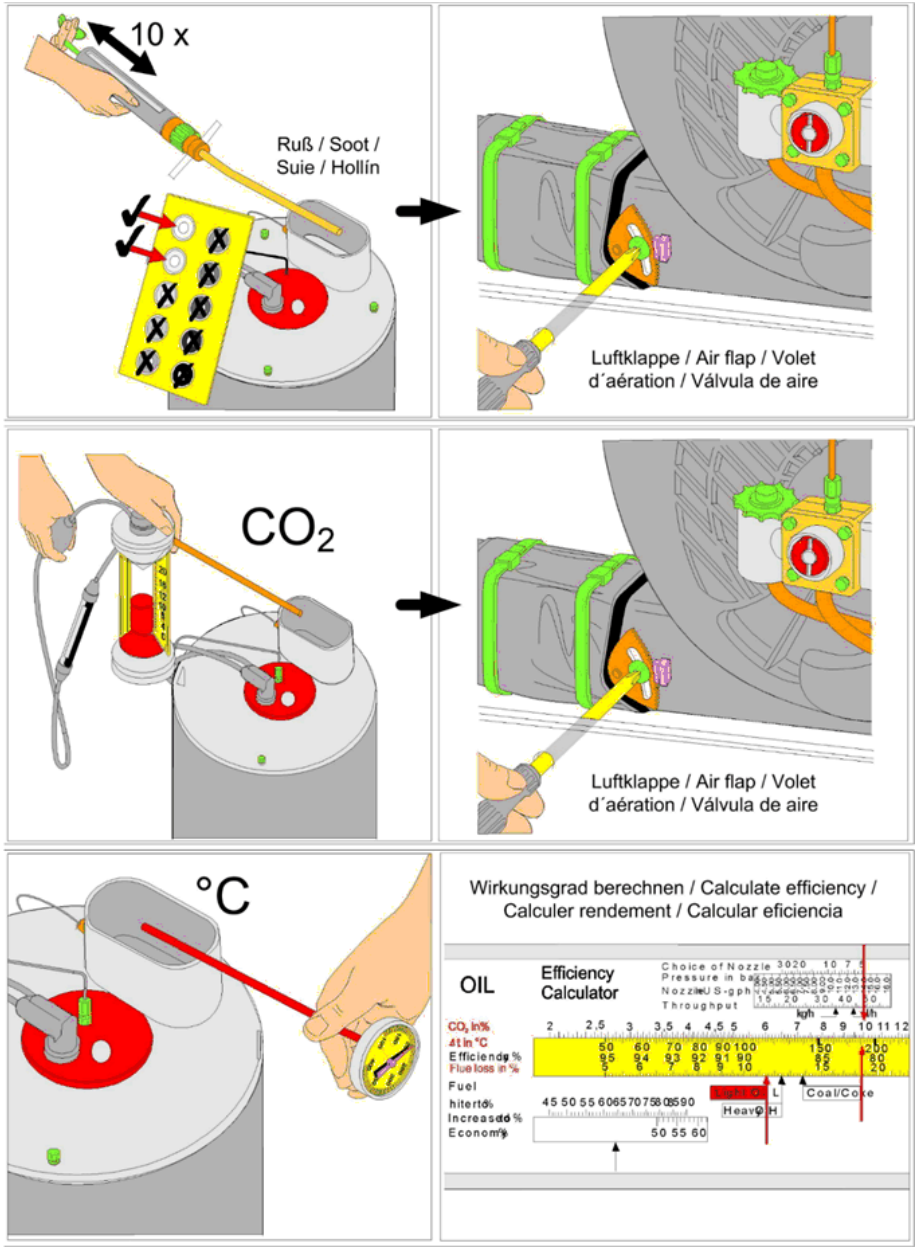
10 x
Ruß / Soot /
Suie / Hollín
Luftklappe / Air flap / Volet
d´aération / Válvula de aire
CO_2
Luftklappe / Air flap / Volet
d´aération / Válvula de aire
°C
Wirkungsgrad berechnen / Calculate efficiency /
Calculer rendement / Calcular eficiencia
OIL
Efficiency
Calculator

205 Tool measuring instrument set HDS (0.120-009.0)

Pos	Material #	Name	Qty.	Unit
1	2.900-001.0	Tool measuring instrument set HDS	1.000	ST

206 Tool temperature gauge stop cock HDS (0.120-010.0)

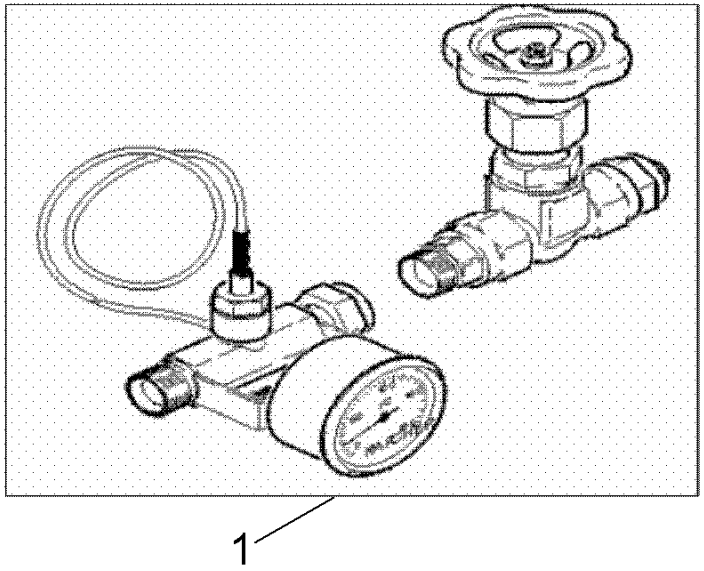

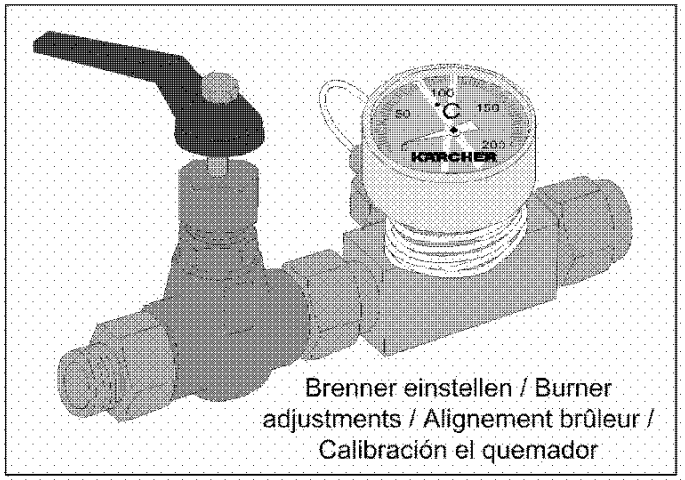

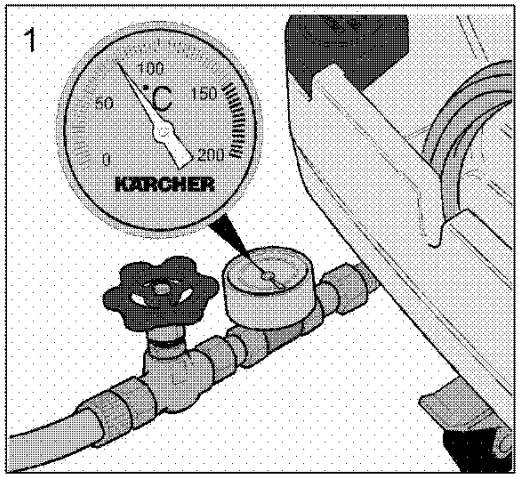

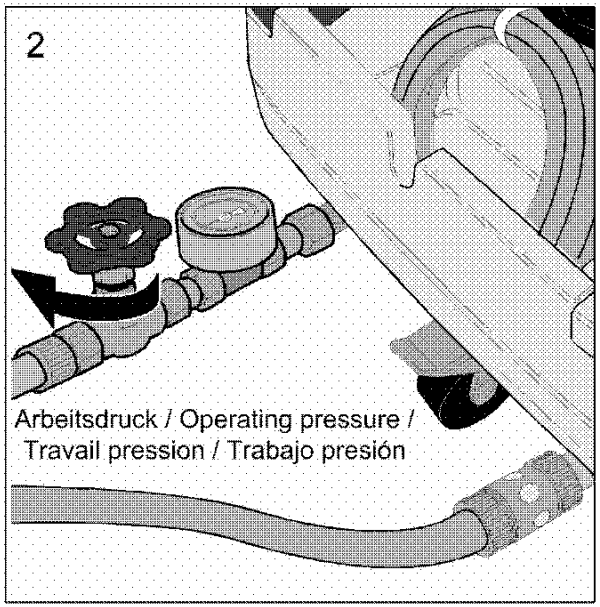

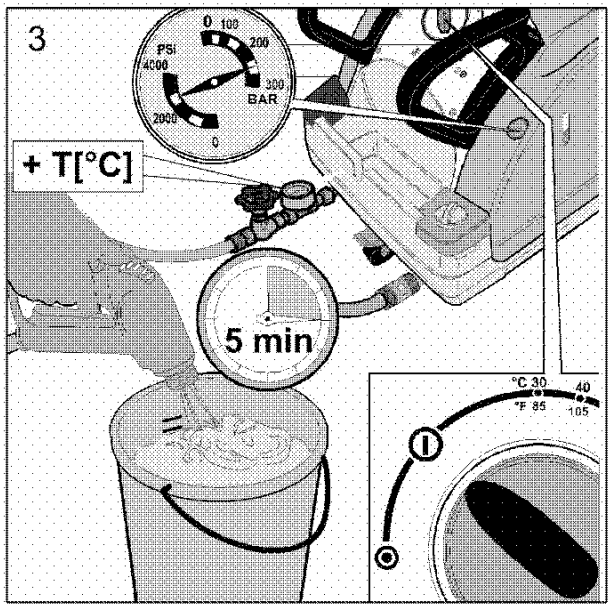

206 Tool temperature gauge stop cock HDS (0.120-010.0)

Pos	Material #	Name	Qty.	Unit
1	2.901-030.0	Tool temperature gauge stop cock HDS	1.000	ST

207 Tool valve seat excess-current (0.120-013.0)

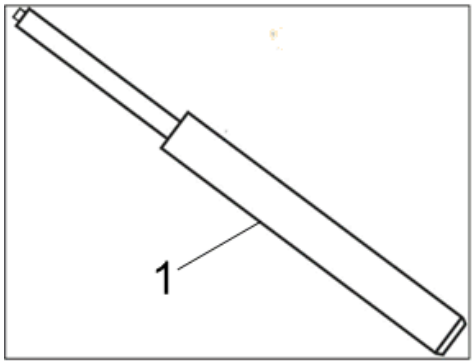

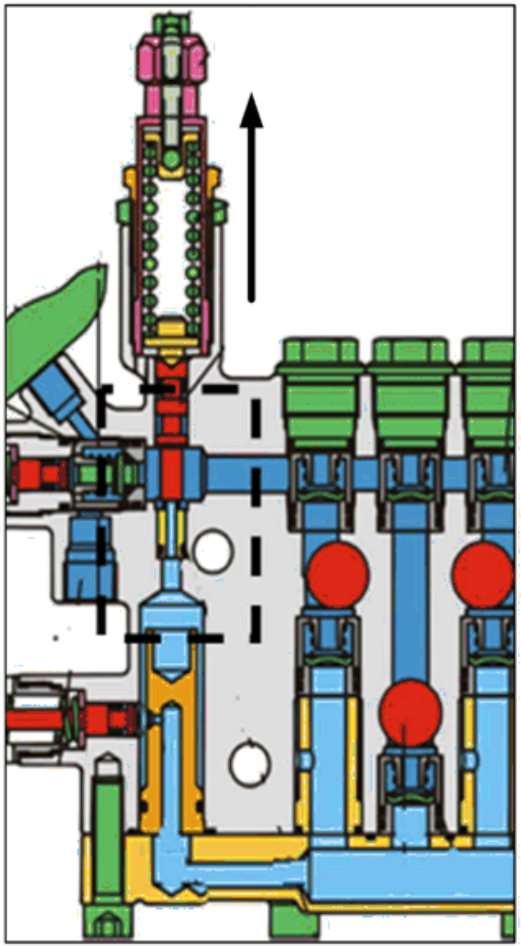

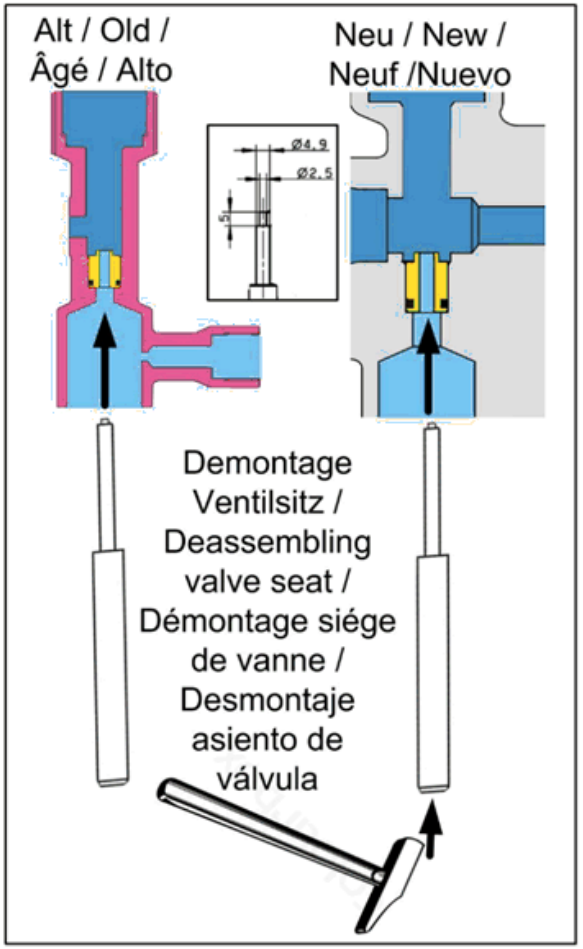

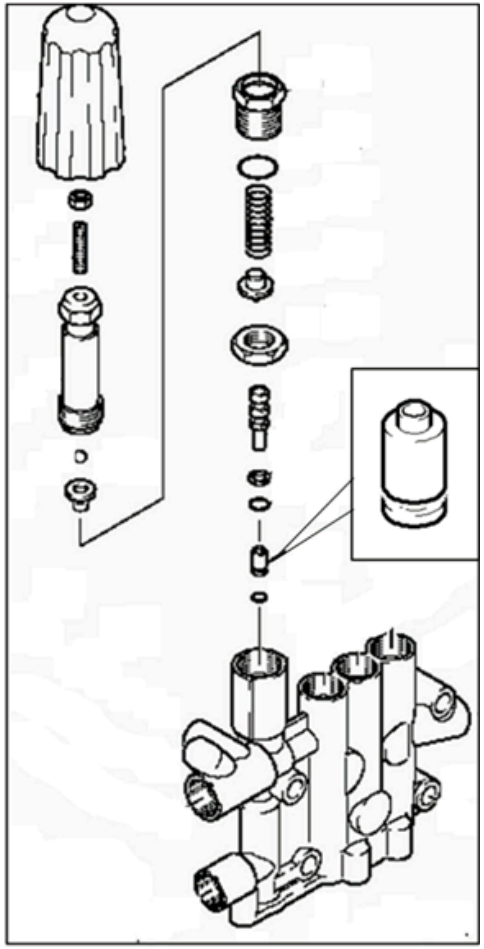

207 Tool valve seat excess-current (0.120-013.0)

Pos	Material #	Name	Qty.	Unit
1	5.901-161.0	Tool valve seat disassembly	1.000	ST

208 Tool pressure gauge fuel HDS (0.120-012.0)

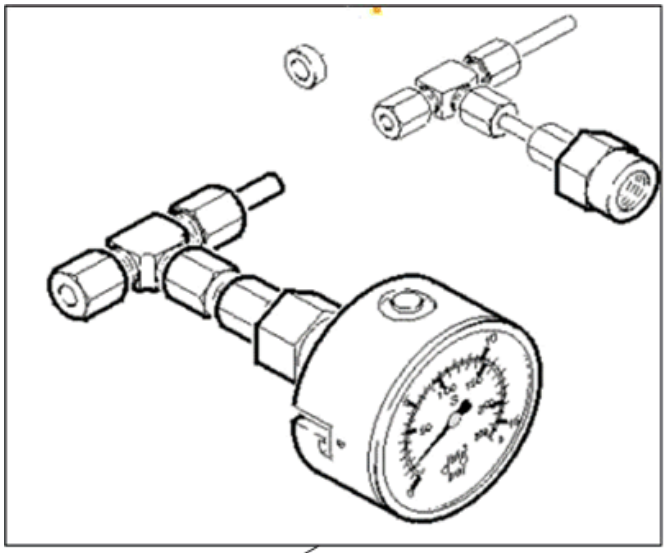

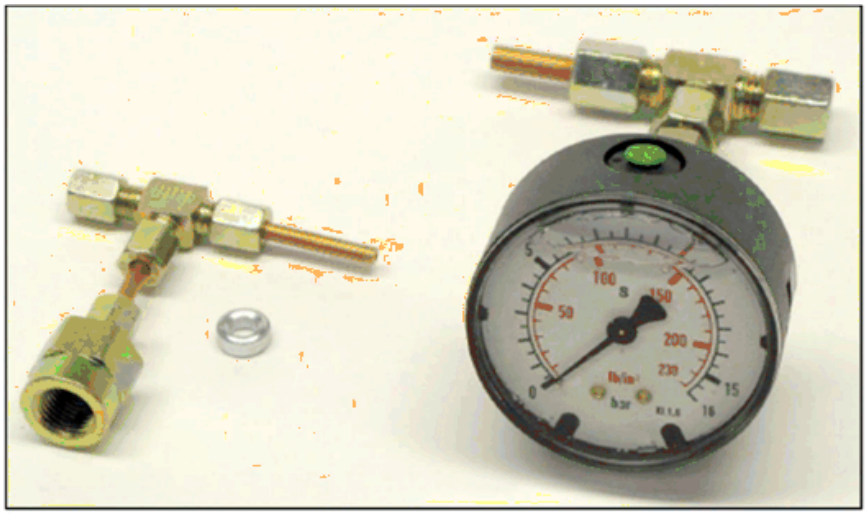

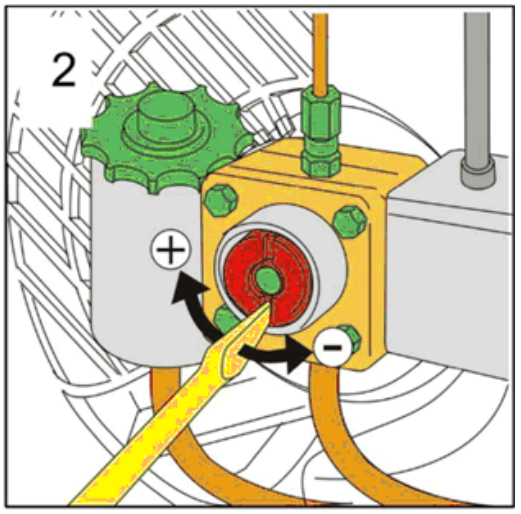

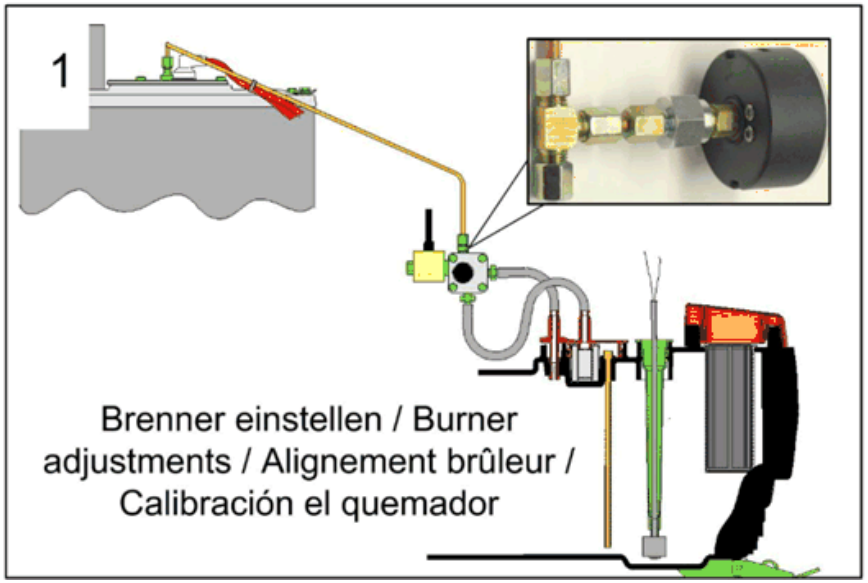

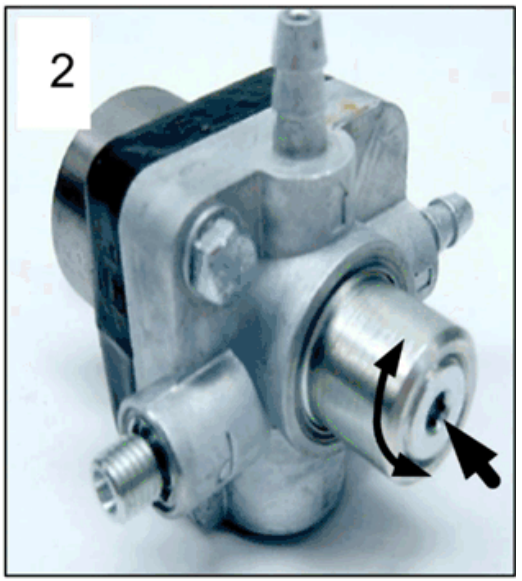

208 Tool pressure gauge fuel HDS (0.120-012.0)

ET/VT (spare/wear parts)	Pos	Material #	Name	Qty.	Unit
X	1	4.901-060.0	Tool pressure gauge fuel	1.000	ST

209 Tool valve seat excess-current (0.120-014.0)

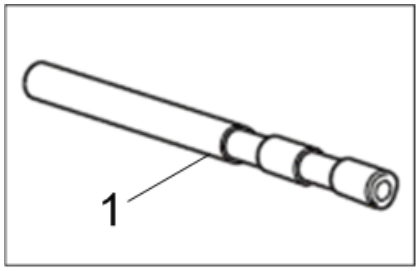

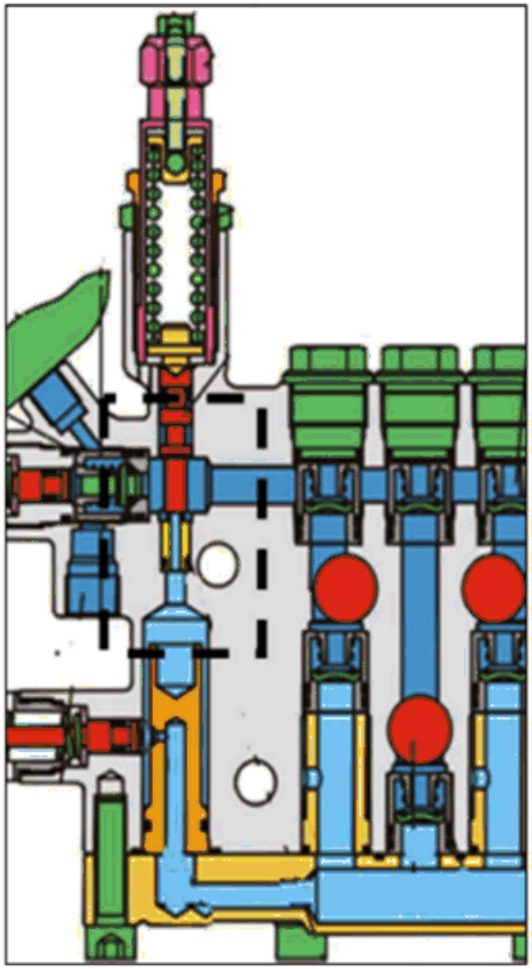

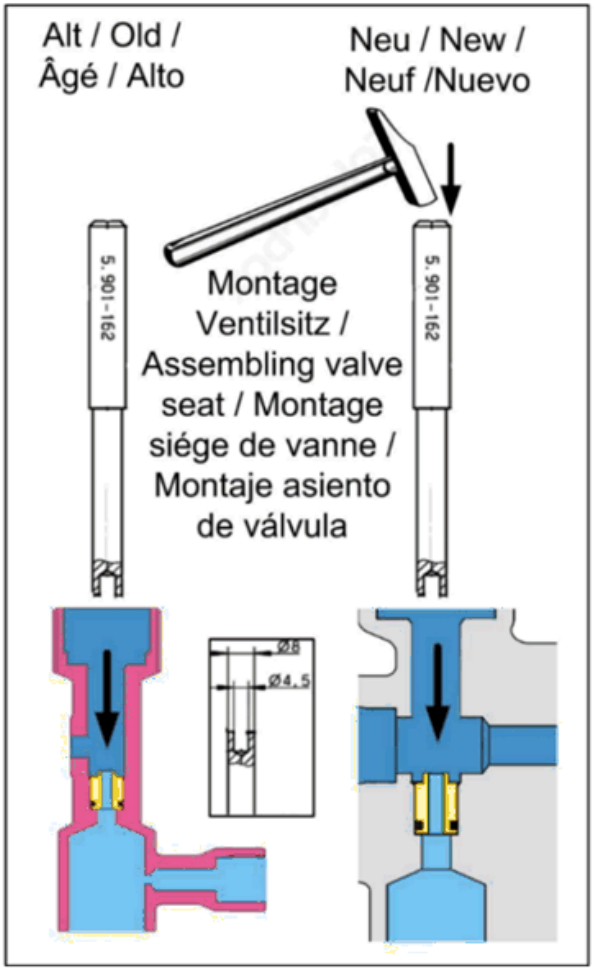

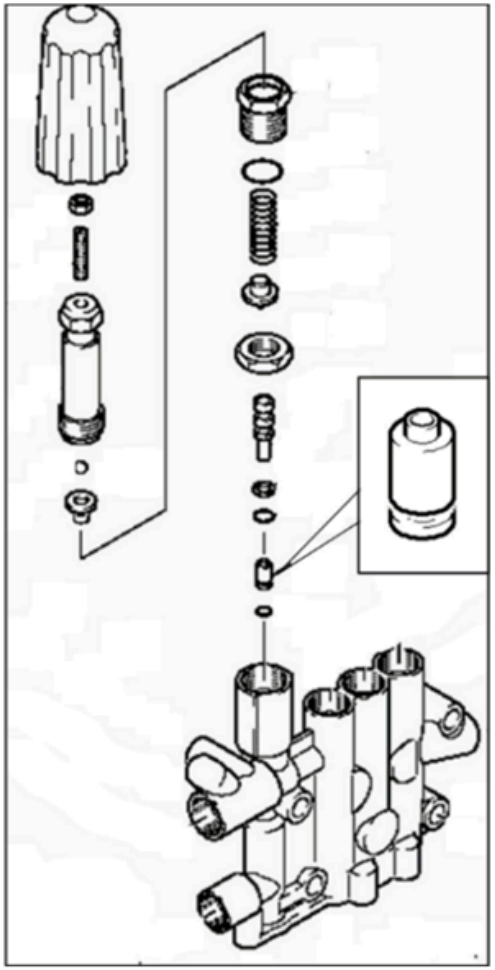

209 Tool valve seat excess-current (0.120-014.0)

Pos	Material #	Name	Qty.	Unit
1	5.901-162.0	Tool valve seat assembly	1.000	ST

210 Tool mandril grooved rings -Piston D20mm (0.120-031.0)

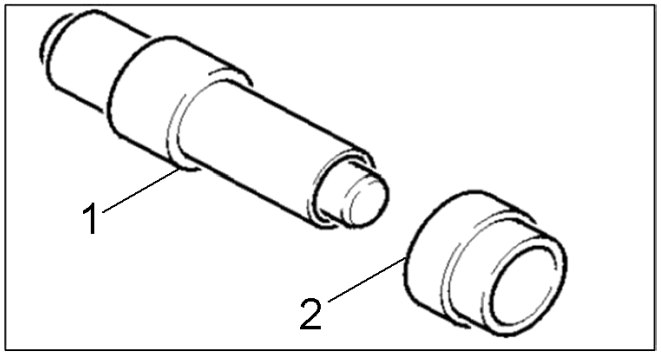

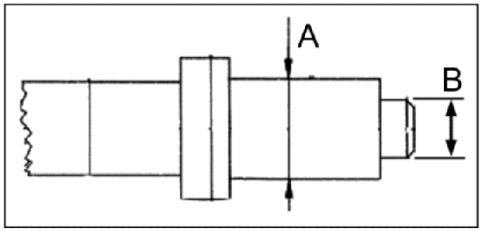

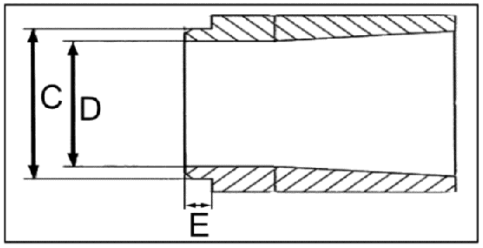

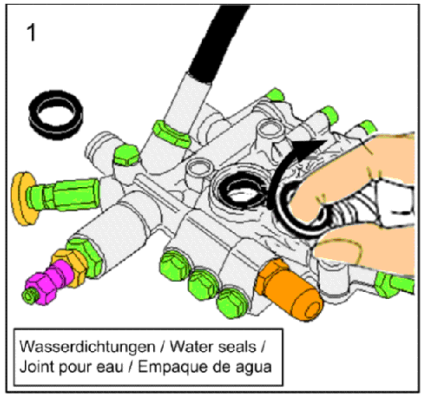

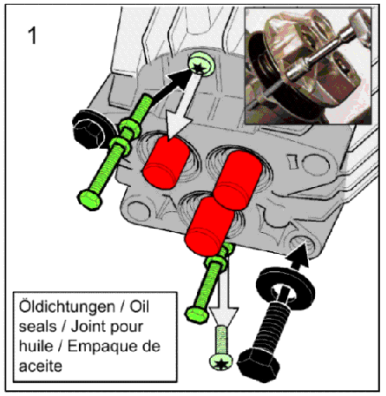

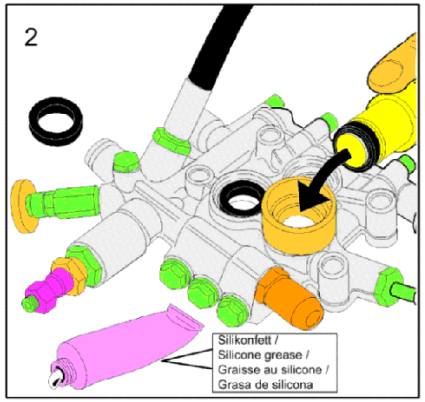

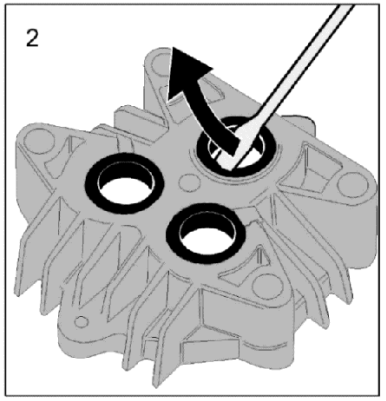

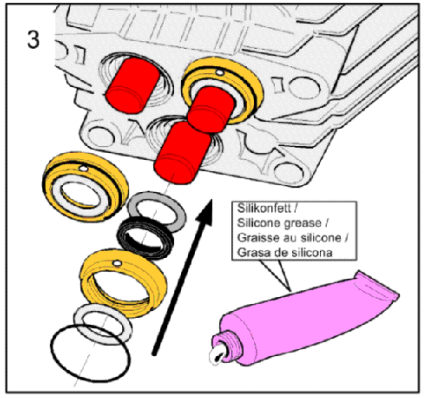

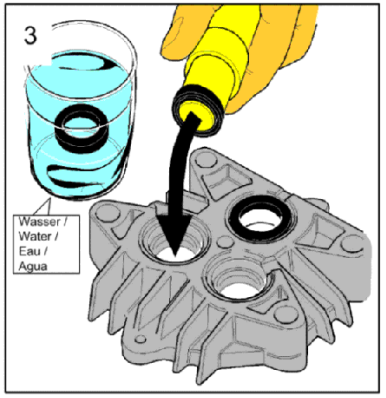

210 Tool mandril grooved rings -Piston D20mm (0.120-031.0)

Pos	Material #	Name	Qty.	Unit
1	5.901-055.0	Tool mandril A=27,6mm;B=19,5mm	1.000	ST

211 Tool sleeve grooved rings -Piston D20mm (0.120-032.0)

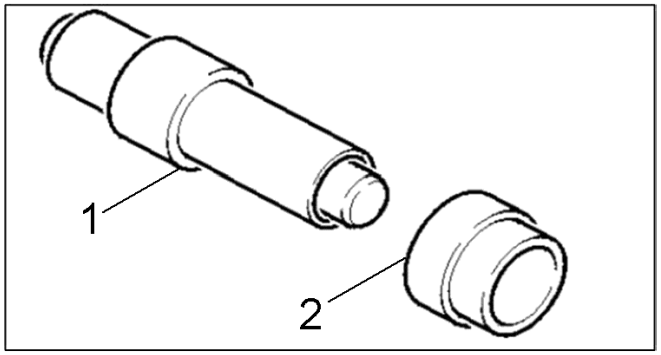

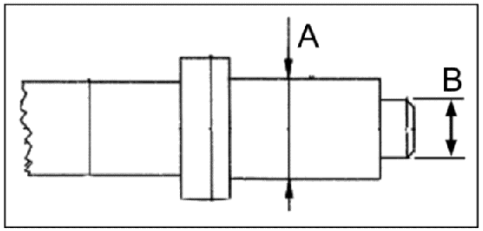

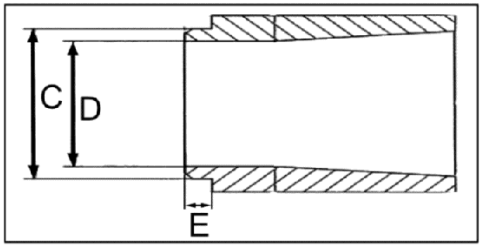

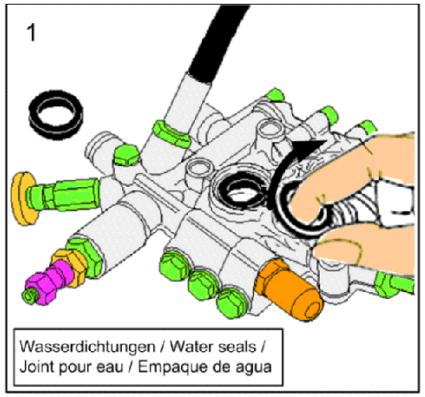

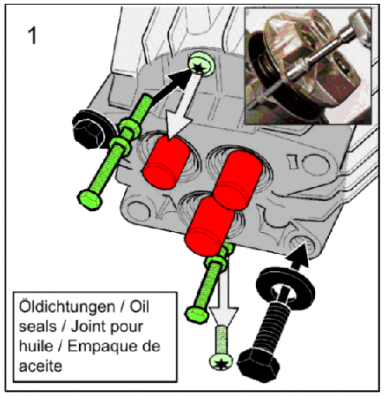

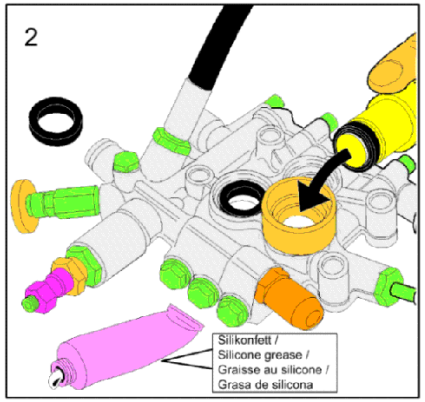

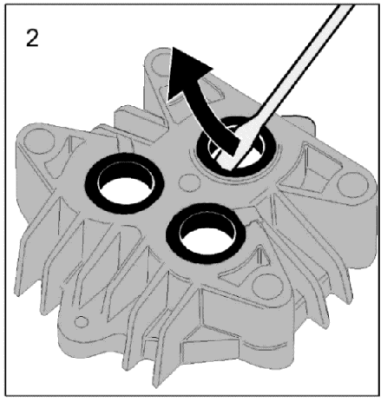

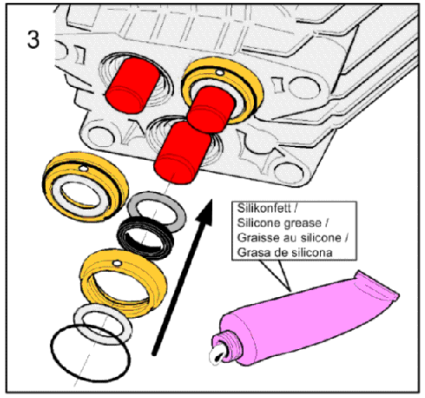

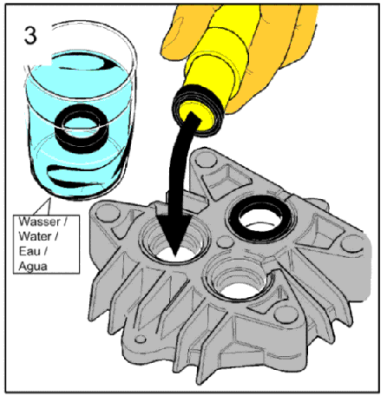

211 Tool sleeve grooved rings -Piston D20mm (0.120-032.0)

Pos	Material #	Name	Qty.	Unit
2	5.901-144.0	Tool sleeve C=39,9;D=29,7;E=7mm	1.000	ST

212 Tool internal puller D8-12mm (0.120-062.0)

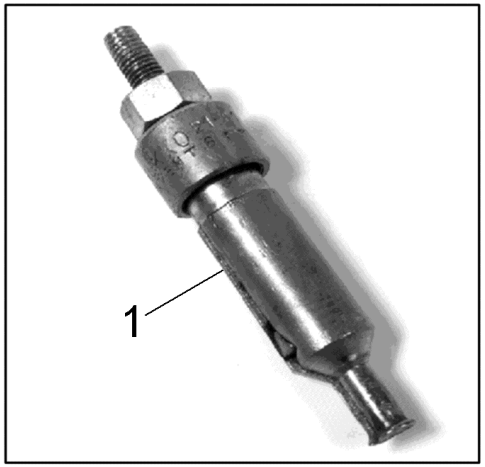

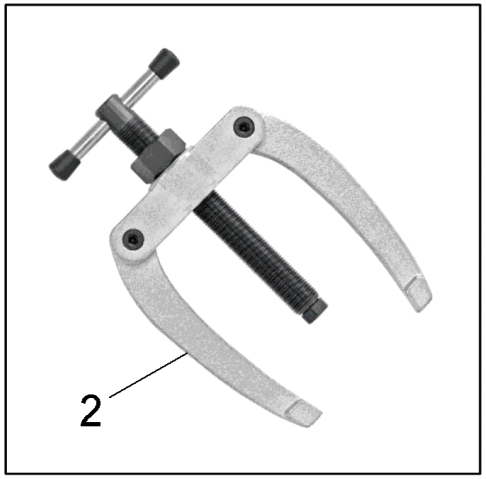

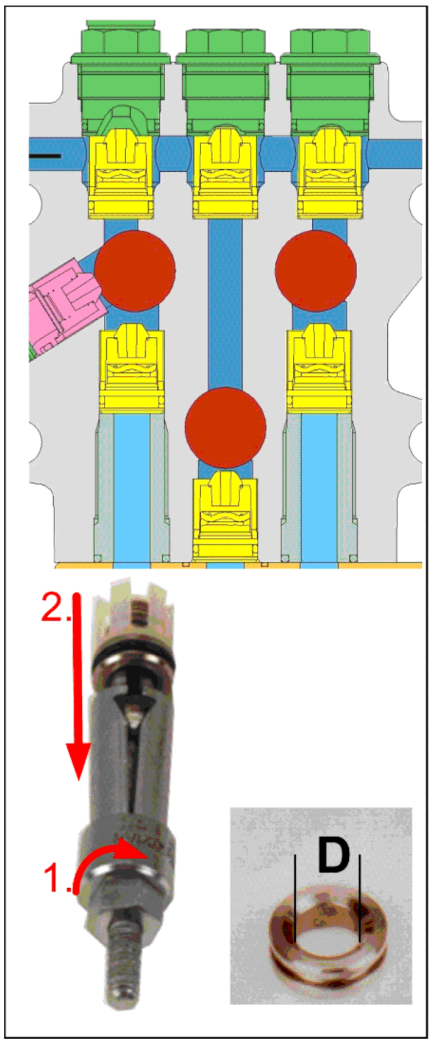

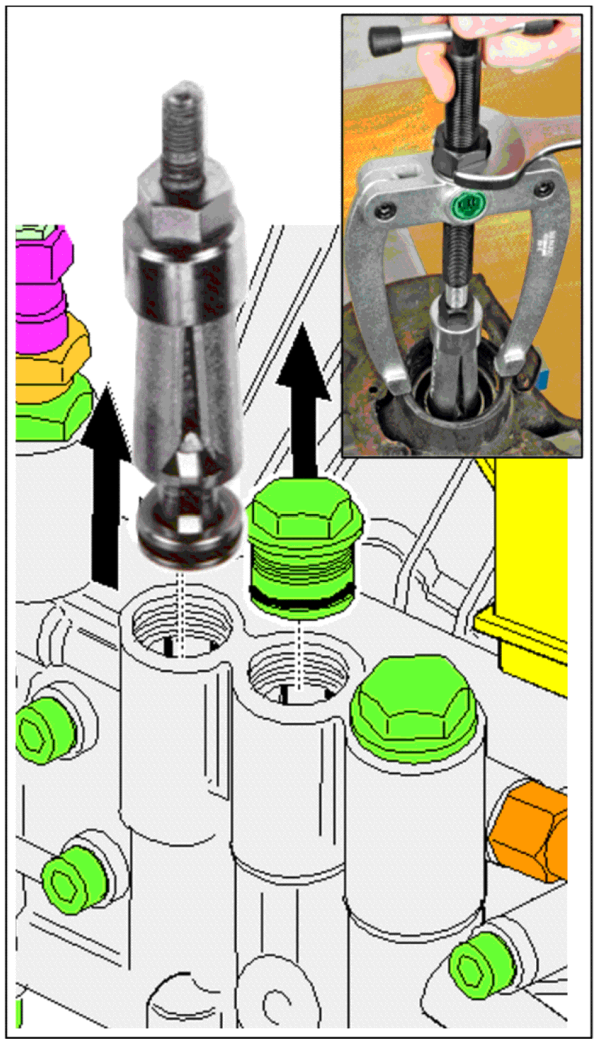

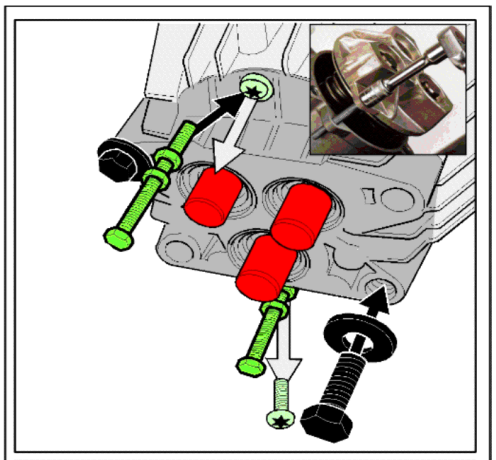

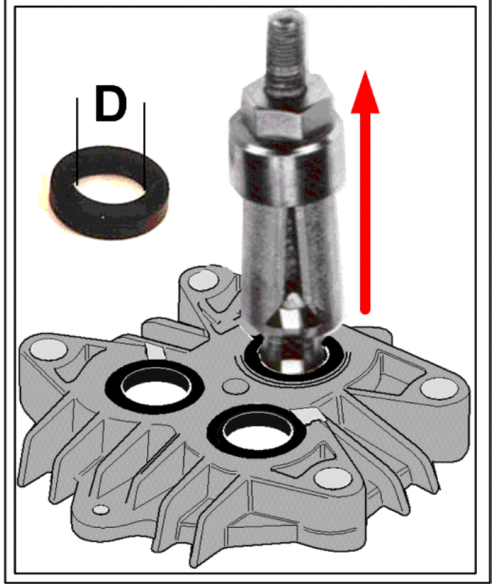

212 Tool internal puller D8-12mm (0.120-062.0)

Pos	Material #	Name	Qty.	Unit
1	6.815-029.0	Tool internal puller D8-12mm	1.000	ST

213 Tool countersupport internal puller (0.120-060.0)

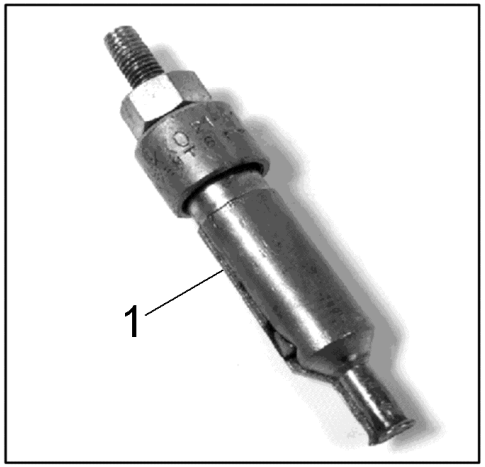

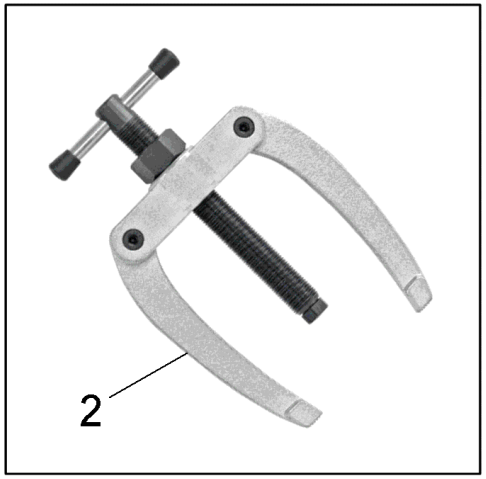

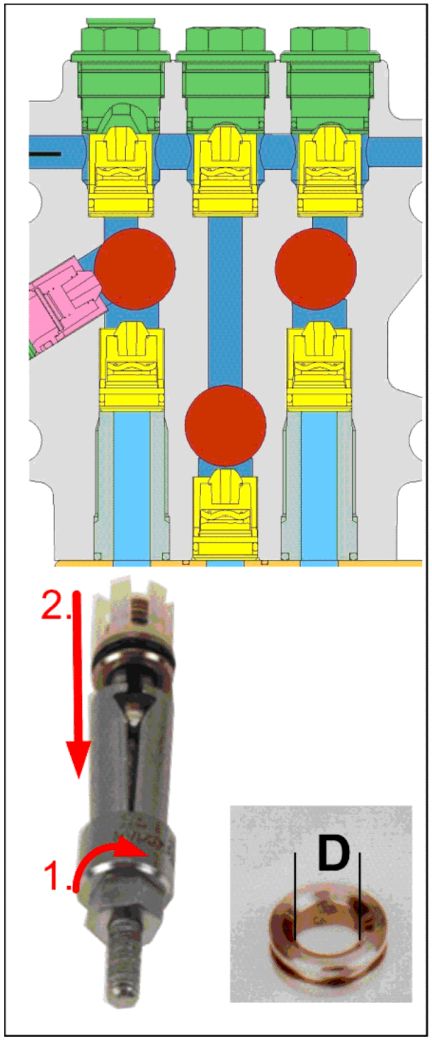

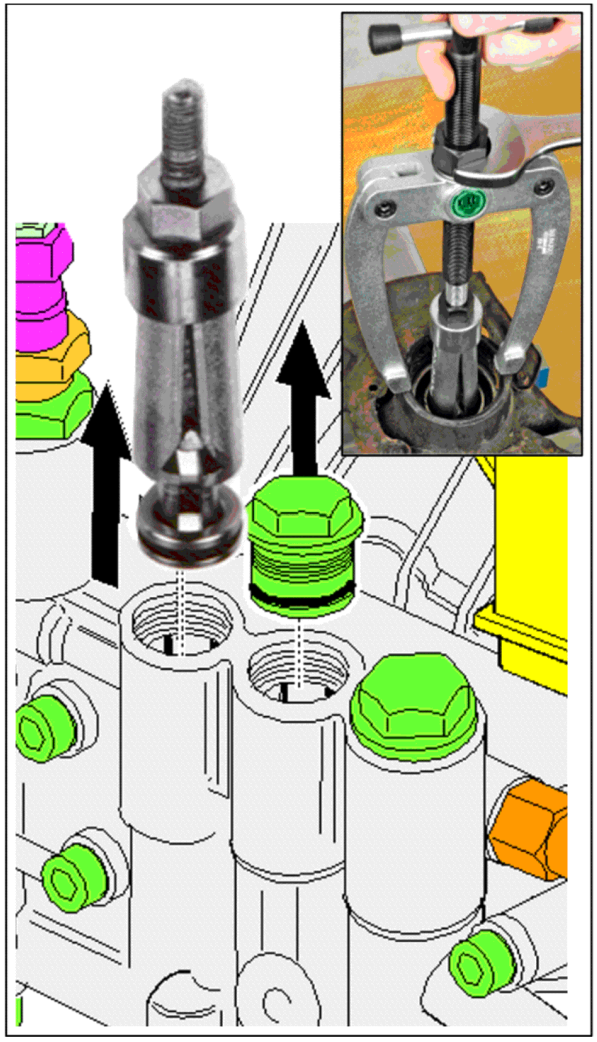

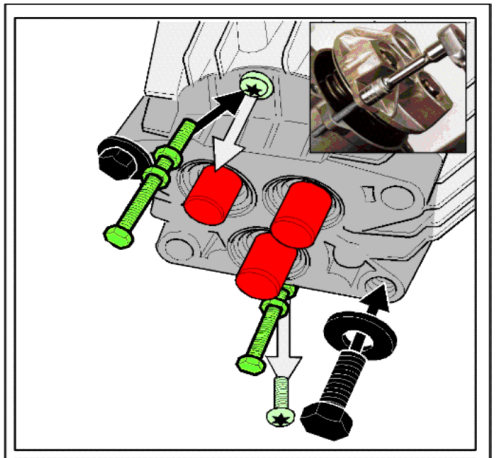

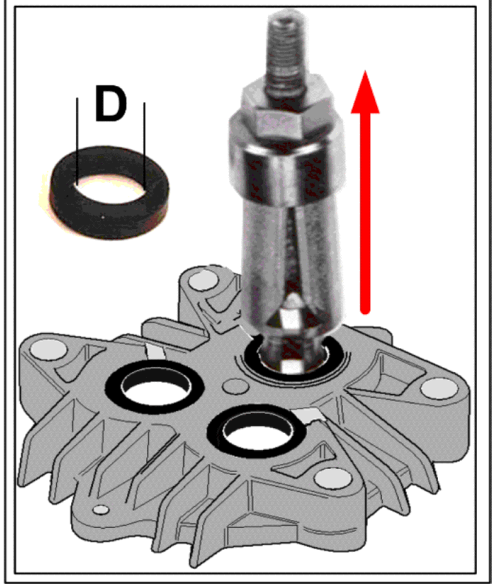

213 Tool countersupport internal puller (0.120-060.0)

Pos	Material #	Name	Qty.	Unit
2	6.815-009.0	Tool countersupport internal puller	1.000	ST

214 Tool internal puller D20-30mm (0.120-064.0)

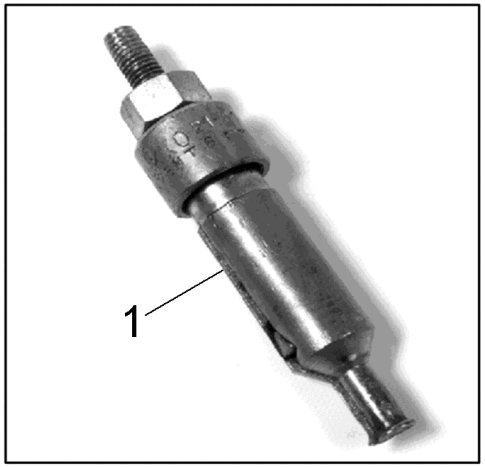

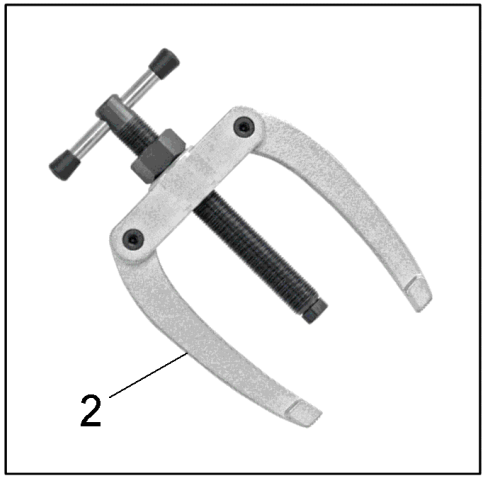

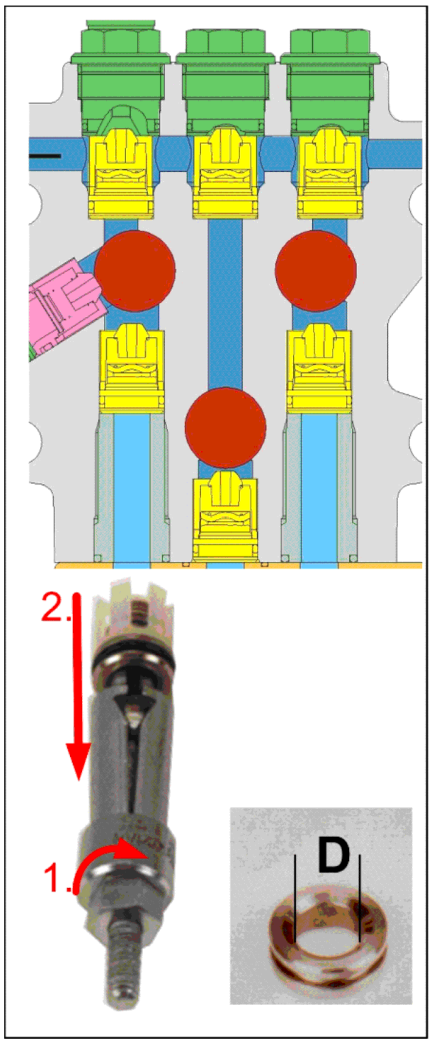

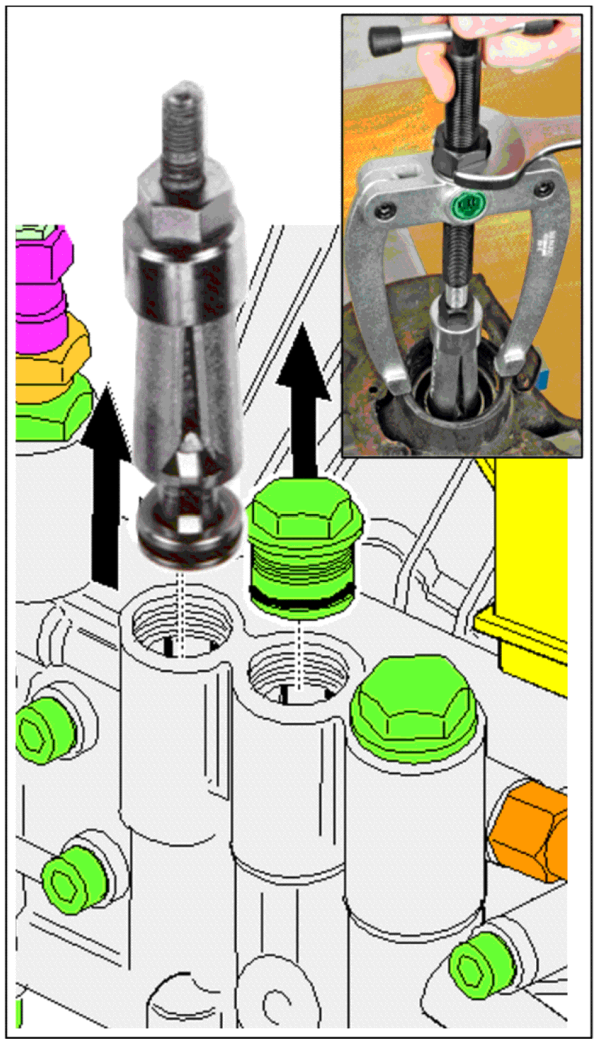

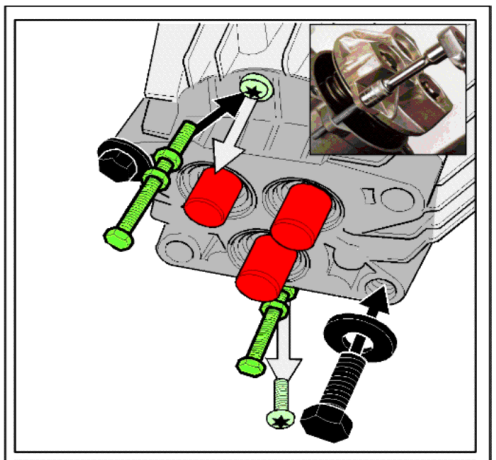

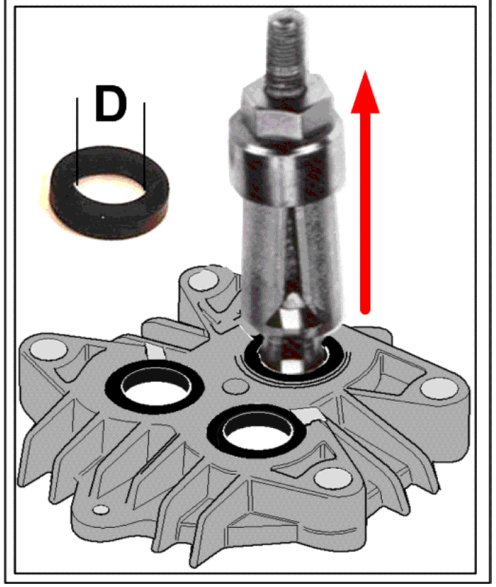

214 Tool internal puller D20-30mm (0.120-064.0)

Pos	Material #	Name	Qty.	Unit
1	6.815-008.0	Tool internal puller D20-30mm	1.000	ST