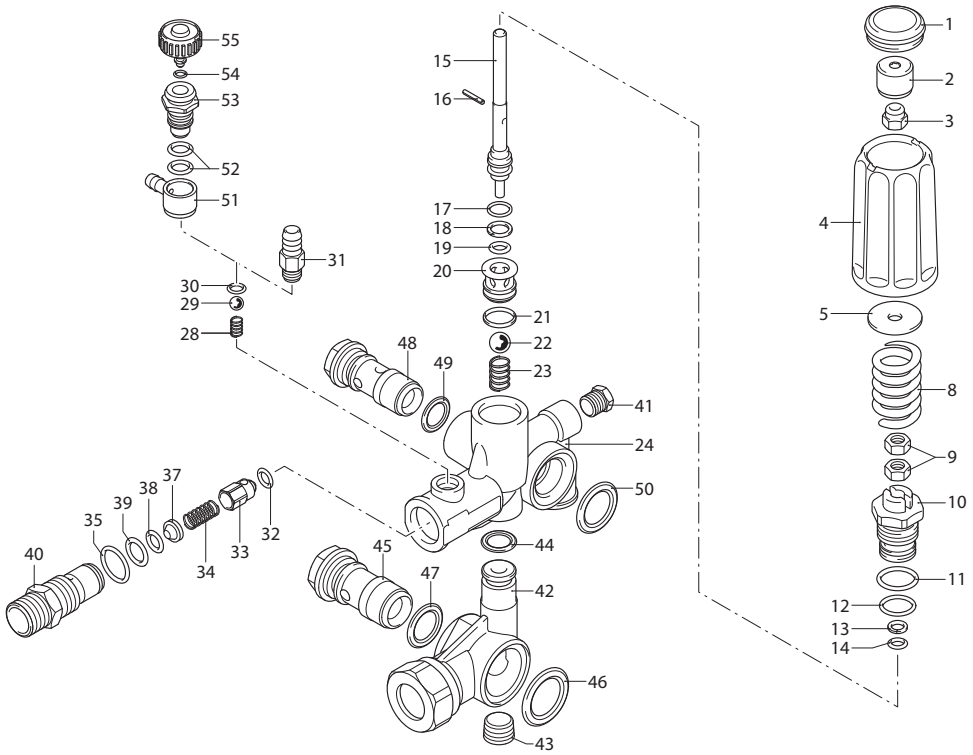

Repair Kits

11(1)	30(1)	
12(1)	35(1)	
13(1)	38(1)	
14(1)	39(1)	50(1)
17(1)	44(1)	52(2)
18(1)	46(1)	54(1)
19(1)	47(1)	**O-Rings**
21(1)	49(1)	Kit 42584

Pos	Code	Description	Qty
1	3200500	Plug	1
2	3200520	Bushing	1
3	3000170	Nut	1
4	3200480	Handle	1
5	3200600	Washer	1
8	3201340	Spring	1
9	1980300	Nut M6	2
10	3200530	Piston guide	(310 in/lbs) 1
11	1200690	O-ring Ø 15.6x1.78	1
12	394280	O-ring Ø 12.42x1.78	1
13	3200540	Ring	1
14	770090	O-ring Ø 5.28x1.78	1
15	3200510	Piston	1
16	3200620	Pin	1
17	480560	O-ring Ø 6.75x1.78	1
18	1080401	Ring	1
19	660191	O-ring Ø 6.07x1.78	1
20	3200550	Seat	1
21	770140	O-ring Ø 11.11x1.78	1
22	3200590	Ball	1
23	3200580	Spring	1
24	3201020	Valve housing	1
28	1560520	Spring	1
29	1250280	Ball	1
30	480480	O-ring Ø 4.48x1.78	1
31	1982520	Hose tail	(35 in/lbs) ● 1
32	1460430	O-ring Ø 4x2.5	1
33	2760130	Jet	1
34	2760200	Spring	1
35	394280	O-ring Ø 12.42x1.78	1
37	2760120	Injector insert	1
38	1470210	O-ring Ø 9x1	1
39	2760270	O-ring Ø 12x1	1
40	2760230	Detergent injector	(354 in/lbs) 1
41	620301	Plug	1
42	3201030	By-pass housing	1
43	2760260	Plug	1
44	1260740	O-ring Ø 10.77x2.62	1
45	2260420	Screw	1
46	1540630	O-ring Ø 23.47x2.62	1
47	880270	O-ring Ø 17.17x1.78	1
48	1540272	Screw - 3/8" G	1
49	390080	O-ring Ø 11.91x2.62	1
50	1140450	O-ring Ø 20.24x2.62	1
51	1981940	Hose tail	■ 1
52	880840	O-ring Ø 9.25x1.78	■ 1
53	1981930	Injector housing	(35 in/lbs) ■ 1
54	1080190	O-ring Ø 2.90x1.78	■ 1
55	1269000	Handle	■ 1

Legend	
For ●	For ■
AR23505	AR23506