KE Series

FEATURES

Designed and engineered exclusively for pressure washers.

Five year limited warranty.

Forged brass manifold with an exclusive lifetime warranty.

Large capacity, die-cast, anodized aluminum oil-bath crankcase.

Aluminum two piece connecting rods with lubrication channels for maximum life.

Heavy-duty crankshaft bearings.

Solid ceramic plungers with mirror finish and corrosion resistance.

Parker® "V" seals for premium performance.

Stainless steel inlet and discharge valve assemblies.

Forged valve caps with recessed O-rings.

Dacromet® coated manifold bolts for extra corrosion resistance.

Precision oil dipstick for proper ventilation of crankcase.

Flanged for direct couple to electric motor (56C).

SPECIFICATIONS

PUMP MODEL	KE2020F	KE2020S	KE2825F	KE2825S	KE3525F
Maximum Volume (GPM)	2	2	2.8	2.8	3.5
Max. Discharge Pressure (PSI)	2000	2000	2500	2500	2500
Maximum Pump Speed	3400	1725	3400	1725	3400
Maximum Inlet Pressure	125 psi				
Maximum Inlet Vacuum	Flooded				
Bore	15 mm	18 mm	15 mm	18 mm	15 mm
Stroke	4.6 mm	5.6 mm	7.0 mm	8.4 mm	8.8 mm
Crankcase Oil Capacity	14 oz.				
Maximum Fluid Temperature	165°F				
Inlet Port Thread	1/2-14 BSPP-F				
Discharge Port Thread	3/8-19 BSPP-F				
Shaft Diameter	5/8" Hollow				3/4" Hollow
Weight	17 lbs.				
Dimensions (LxWxH)	8.5 x 7.5 x 6.5 in.				

KÄRCHER • USA

Phone: 1-888-805-9852 or visit our web page at **www.karchercommercial.us**

9.800-146.0 • Rev. 5/07

KÄRCHER KE Series Pump

9.803-814.0 KE 2020F
9.803-815.0 KE 2020S
9.803-816.0 KE 2825F
9.803-817.0 KE 2825S
9.803-818.0 KE 3525F

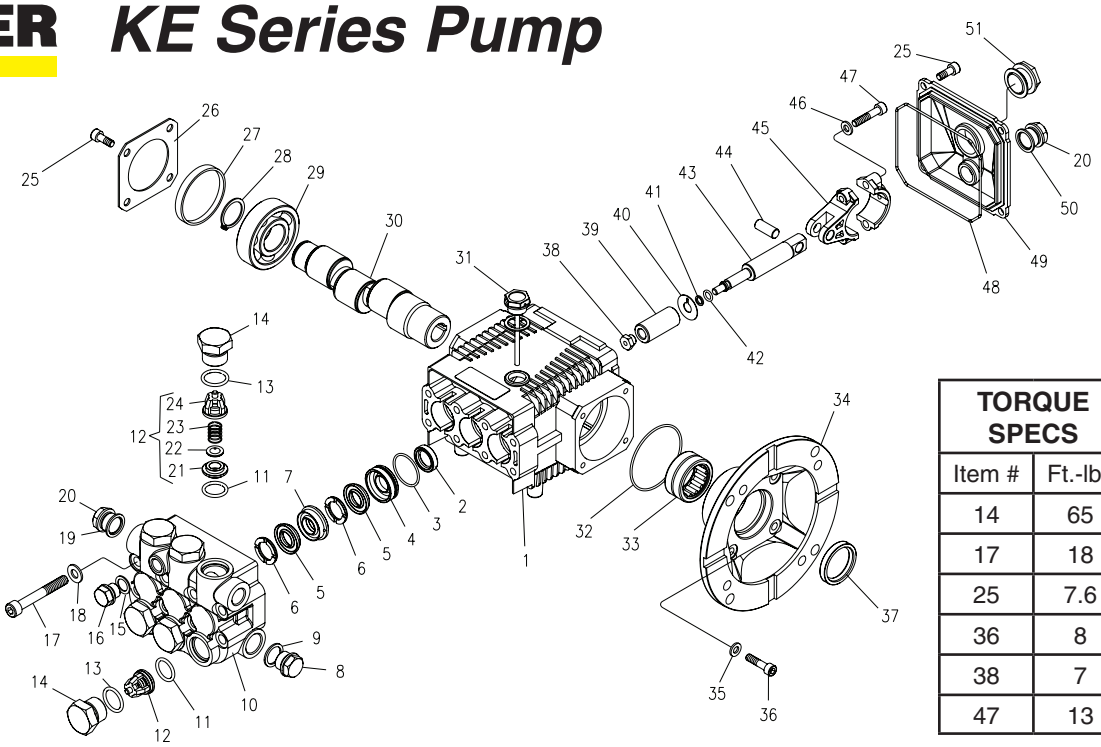

TORQUE SPECS	
Item #	Ft.-lbs
14	65
17	18
25	7.6
36	8
38	7
47	13

PARTS LIST

ITEM	PART NO.	DESCRIPTION	QTY
1	70-020292	Crankcase	1
2*	70-000105	Plunger Oil Seal	3
3*	70-060181	O-Ring Ø 1.78 x 28.30	3
4*	70-120131	Pressure Ring 15mm	3
	70-120132	Pressure Ring 18mm	3
5*	70-000207	"V" Seal, dia 15mm	6
	70-000208	"V" Seal, dia 18mm	6
6*	70-030048	Support Ring 15mm	6
	70-030050	Support Ring 18mm	6
7*	70-030049	Intermed Ring 15mm	3
	70-030051	intermed Ring 18mm	3
8*	70-160120	Brass Plug G1/2	1
9	70-060307	Copper Washer 1/2"	1
10	70-160228	Manifold Housing	1
11	70-060155	O-Ring Ø1.78 x 15.54	6
12*	See Kit Below	Valve Assembly	6
13*	70-060122	O-Ring Ø2.62 x 18.77	6
14	70-160147	Valve Plug	6
15	70-060308	Copper Washer 1/4	1

ITEM	PART NO.	DESCRIPTION	QTY
16	70-160121	Brass Plug G1/4	1
17	70-180118	Manifold Stud Bolt	8
18	70-140001	Washer	8
19	70-060306	Copper Washer 3/8	1
20	70-160117	Brass Plug G3/8	2
25	70-180112	Screw	12
26	70-020318	Bearing Cover	2
27	70-020502	Bearing Seal	1
28	70-150003	Snap Ring	1
29	70-021300	Ball Bearing	2
30	70-000600	Crankshaft (2020F)	1
	70-000601	Crankshaft (2020S)	1
	70-000602	Crankshaft (2825F)	1
	70-000603	Crankshaft (2825S)	1
	70-000604	Crankshaft (3525F)	1
31	70-160012	Oil Dipstick	1
32	70-060183	O-Ring Ø3.53 x 55.56	1
33	70-020011	Needle Bearing	1
34	70-050095	Motor Flange 56C	1

ITEM	PART NO.	DESCRIPTION	QTY
35	70-140002	Washer	4
36	70-180126	Flange Screw	4
37	70-000104	Crankshaft Seal	1
38*	70-030211	Plunger Nut	3
39*	70-120023	Plunger 15mm (2020F, 2825F, 3525F)	3
	70-120022	Plunger 18mm (2020S, 2825S)	3
40*	70-140027	Copper Spacer	3
41*	70-060130	O-Ring Ø1.78 x 5.28	3
42*	70-000913	Teflon Ring	3
43	70-000320	Plunger Rod	3
44	70-1502.04	Connecting Rod Pin	3
45	70-010008	Connecting Rod	3
46	70-140102	Spring Washer	6
47	70-180132	Connecting Rod Screw	6
48	70-060104	O-Ring Ø2.62 x 107.62	1
49	70-020352	Crankcase Cover	1
50	70-060302	Gasket	1
51	70-070005	Sight Glass	1

REPAIR KITS

REPAIR KIT NUMBER	70-261408	70-261410	70-261409	70-261411	70-261404	70-261405	70-260028	70-260826
KIT DESCRIPTION	Plunger Seal KE 2020F KE 2825F KE 3525F	Plunger Seal 18mm KE 2020S KE 2825S	Complete Seal Packing 15mm KE 2020F KE 2825F KE 3525F	Complete Seal Packing 18 mm KE 2020S KE 2825S	Plunger 15mm KE 2020F KE 2825F KE 3525F	Plunger 18mm KE 2020S KE 2825S	Complete Valve	Plunger Oil Seals
ITEM NUMBERS INCLUDED	3, 5, 6	3, 5, 6	2, 3, 4, 5, 6, 7	3, 4, 5, 6, 7, 8	38, 39, 40, 41, 42	38, 39, 40, 41, 42	11, 12, 13	2
NO. OF CYLINDERS KIT WILL SERVICE	3	3	1	1	1	1	6	3